Tel No. - 022 25421373
25434349
Email- dcfthane@gmail.com
dycftahne@mahaforest.gov.in

State Government
Forest
Deputy Conservator of Forests, Thane Forest Division
Thane Office
Marathon Circle, Lal Bahadur Shastri Marg, Naupada Thane- 400 602.

Letter No. 25/B/Survey/FCA/3494/2025-26 Date - 17/10/2025

To,

Shri. Vijay B. Aware,
Executive Engineer, MSETCL,
E.H.V. Contruction Division,
Kalyan - 421 301.

Subject :- Diversion of 12.0225 Ha Forest Land in favour of EHV Project Division, Kalyan for Construction and laying of 220 KV LILO M/C Transmission Line on 220 KV Padghe Wada & Kolshet Wada Tr.line for 400 KV Kudus Sub Station passing through Village Eksal, Chichavali, Kunde, & Dighashi Taluka Bhiwandi District Thane in the State of Maharashtra. **(Revised Demand Note)**

Reference :-
1. Ministry of Environment, Forests & Climate Change Nagpur's letter No 5-3/2011-FC (Vol-I) Dt. 06/01/2022.
2. Ministry of Environment, Forests & Climate Change Nagpur's letter No 5-3/2011-FC (Vol-I) Dt. 19/01/2022.
3. Ministry of Environment, Forests & Climate Change Nagpur's letter No FC-II/MH-201/2022-NGP/14610 Dt. 29/08/2025.
4. This office Letter No. 25/B/Survey/FCA/3427 Dt. 16/10/2025.

As per the reference cited above, Shri. Vijay B. Aware, Executive Engineer, MSETCL, E.H.V. Construction Division, Kalyan is requested to pay the item - wise amount of compensatory levies are as follow,

Compensatory Levies

Sr. No	Item	Condition as mentioned In-Principle approval	Amount in Rs	Remarks
1	Cost towards Compensatory Afforestation	3	18231004.00	Ad Hoc CAMPA through E-Portal
2	Cost towards Addl. Compensatory Afforestation	-	-	-
3	NPV	7	13427930.00	Ad Hoc CAMPA through E-Portal
4	Cost of Penalty for Violation	8	233939.00	Ad Hoc CAMPA through E-Portal
5	Cost towards catchment area treatment Plan	-	-	-
6	Cost towards Wildlife Mitigation measure	-	-	-

Scanned with OKEN Scanner

7	Cost of felling of trees.	-	473822.00	Deputy Conservator of Forest, Thane Through Demand Draft
8	Boundary Pillar	2	1908760.00	Ad Hoc CAMPA through E-Portal
9	Bird Nest	-	-	-
10	Medicinal Plant	6	2941866.00	Ad Hoc CAMPA through E-Portal
	TOTAL		**37217321.00**	

The Shri. Vijay B. Aware, Executive Engineer, MSETCL, E.H.V. Construction Division, Kalyan is also requested to submit the documents, certificate and undertakings as stipulated in the in-principle approval as per the following details.

Sr. No.	Condition No. as mentioned in- principle approval	Name of Document/Certificate/ Undertaking required to be submitted by the User Agency
1	1	Undertaking
2	4	Undertaking
3	5	Undertaking
4	9	Undertaking
5	10	Undertaking
6	11	Undertaking
7	12	NBWL Clearance
8	13	Undertaking
9	14	Undertaking
10	15	Undertaking
11	16	Undertaking
12	17	Undertaking
13	18	Undertaking
14	19	Undertaking
15	20	Undertaking
16	21	Undertaking
17	22	Undertaking
18	23	Undertaking
19	24	Undertaking

– sd –

(Sachin Repal, IFS)
Deputy Conservator of Forests
Thane Forest Division, Thane

Copy submitted to Additional Principal Chief Conservator of Forest & Nodal Officer, M.S.Nagpur for information
Copy submitted to Chief Conservator of Forests (T.), Thane for information.

(Sachin Repal, IFS)
Deputy Conservator of Forests
Thane Forest Division, Thane

Scanned with OKEN Scanner

220 KV Padghe Wada & Kolshet Wada Transmission Line - 12.0225 Ha.

Condition No.	Condition	Amount
2	Demarcation of 4 Ft. hight RCC Pillars (Estimate)	1908760.00
3	Compenstatory Afforestation	18231003.73
6	Medicinal Plantation (Estimate)	2941866.00
7	NPV (1116900)	13427930.25
8	Penal NPV	233938.95
-	Tree Felling	473821.79
	Total	**37217320.72**
	Says Amount	**37217321**

Compenstatory Afforestation

10.00	7293471.49	18231003.73
15.00	10937532.24	

Reday Recknor	
887385*12.0225	10668586.16

Scanned with OKEN Scanner

220 KV Padghe-Wada & Kolshet-Wada tr.line - 12.0225 Ha.

Penalty charges for Violation

Year	Area (Ha.)	NPV rate /Ha	Penal amount
2018-19	0.041476	1116900	231622.72
1 Month	0.041476	12% intrest for 1 Month	2316.23
Grand Total			**233938.949**
Say Amount			**233939**

Penal NPV

Violation Area * NPV * 5 Times =	0.041476*1116900*5	231622.72
Intrest Amount =	231622.72*12/100	27794.73
1 Month =	27794.73/12	2316.23

Scanned with OKEN Scanner

Enclosure to Principal Chief Conservator of Forest (HoFF), M.S.Nagpur Letter No.Desk-17/CA/Nodal Cell/CR-40/1127/2019-20, Date 04.10.2019

Model Rate Structure for Compensatory Afforestation

Model No..5

Fencing and Irrigated Plantations

Model rate strucutre for plantation of mixed tree species having rainfall less than 800 mm and medium quality, medium drained soil.

Village - Shikara Comt No. 545, Sur/Gut No. 58 , Taluka - Mukhed Dist. Nanded

Spacement	3m x 3m				
Size of Pits	0.45 x 0.45 x 0.45 m	Wage Rate	413.69	per day	Year - 2022-23
No. of Seedlings	1111 per ha.	Proposed Area	10.00	Ha	

Sr. No.	Particulars of works	Area : 1.00 Ha.				Area : 10.00 Ha.			
		Man days	Wages	Material Supply	Total	Man days	Wages	Material Supply	Total
	A. Pre Monsoon Works PPO/PYO								
1	a.) Survey and demarcation	1.00	413.69	91.00	504.69	10.00	4136.90	910.00	5046.90
	b.) Preparation of treatment map (100 m x 50 m grid)	1.00	413.69	91.00	504.69	10.00	4136.90	910.00	5046.90
	c.) Digging trial pits of size 0.30 x 0.30 x 0.60 in corner of Gird.	0.40	165.48	0.00	165.48	4.00	1654.76	0.00	1654.76
	d.) Fixing 60cm x 0.05cm x 12 cm cement pillars upto 30cm deep in corner of Grid, painting with Grid No. etc. complete (3 pillars, Rs.75/- for each pillrs)	0.00	0.00	225.00	225.00	0.00	0.00	2250.00	2250.00
	e.) Clearing of bushes and preparation of site (As per requirement)	10.00	4136.90	91.00	4227.90	100.00	41369.00	910.00	42279.00
2	Soil and moisture conservation works including collection of rubbles from areas upto 30 m etc	31.00	12824.39	0.00	12824.39	310.00	128243.90	0.00	128243.90
3	Providing and fixing chain link fencing, 102 Rmt per HA (With one gate + two wickets gates for one site) (Rs. 1494/- per Rmt of basic rate+ 20% for transportation of ave. leadplus 20% for tribal/remote area (by tender process.) (Rs.1494+149+149= 1792/- per Rmt (1.60 Rmt height with G.I.Chain link size 50mm x 50m, 8 gauge thick and fixed 75mm above ground level compelete as per SSR item No.1744 for 2017-18	0.00	0.00	182865.60	182865.60	0.00	0.00	1828656.00	1828656.00

Sr. No.	Particulars of works	Area : 1.00 Ha.				Area : 10.00 Ha.			
		Man days	Wages	Material Supply	Total	Man days	Wages	Material Supply	Total
4	Alignment of pits at 3m x 3m spacement 1111 pits per ha. (0.25 per 100 pits and M&S @ Rs.2.24 per 50 pits.	2.78	1150.06	49.77	1199.83	27.80	11500.58	497.70	11998.28
5	Digging of pits of size 0.45 x 0.45 x 0.45 m (1111 pits per ha) 6.60 M.D.per 100 pits. Note :- As per local conditions provision for mechanized digging can be made.	73.33	30335.89	0.00	30335.89	733.30	303358.88	0.00	303358.88
6	Construction of 5.00 Rmt wide Inspection Path 1M.D. per 100 Rmt	1.00	413.69	0.00	413.69	10.00	4136.90	0.00	4136.90
7	Enumeration of all valuable plant species at plantaiton site and grid wise counting and providing color band and recording the same in Register 0.75 M.D.) per 100 plants	0.75	310.27	25.00	335.27	7.50	3102.68	250.00	3352.68
8	Providing and fixing (4 feet x 3 feet) information board each per site	0.00	0.00	5000.00	5000.00	0.00	0.00	5000.00	5000.00
9	Part Nursery cost of raising 1333 seedings per ha (including 20% causalty replacement) in polygons of size 12.50 x 25.00 cm (wages Rs. 11.90 and M & S Rs. 3.62 per palnt)	46.71	19323.46	4825.46	24148.92	467.10	193234.60	48254.60	241489.20
	Total	**167.97**	**69487.51**	**193263.83**	**262751.34**	**1679.70**	**694875.09**	**1887638.30**	**2582513.39**
	Contingency 3%				7882.54				77475.40
	Labour Welfare 4%				10510.05				103300.54
	Grand Total	**167.97**	**69487.51**	**193263.83**	**281143.93**	**1679.70**	**694875.09**	**1887638.30**	**2763289.33**

Sr. No.	Particulars of works	Area : 1.00 Ha.				Area : 10.00 Ha.			
		Man days	Wages	Material Supply	Total	Man days	Wages	Material Supply	Total
	B. First Year Operations								
1	Part Nursery cost for maintenance of 1333 seedling per ha Rs.3.77 per seeding (Wages Rs.2.69, M & S Rs. 0.81)	14.80	6122.61	1079.73	7202.34	148.00	61226.12	10797.30	72023.42
2	Refilling of pits by good quality soil including application of single super phosphate (1.66 MD per 100 pits)	18.44	7628.44	1944.25	9572.69	184.40	76284.44	19442.50	95726.94
3	Transportation of 1333 seedings from Nursery to plantation site including loading & unloading (0.14 M.D. per 100 seedlings & M.S. Rs.1.82 per seedlings)	1.87	773.60	2426.00	3199.60	18.70	7736.00	24260.00	31996.00
4	Planting of 1111 seedlings (1.0 M.D. per 100 seedlings)	11.11	4596.10	0.00	4596.10	111.10	45960.96	0.00	45960.96
5	3 seedlings (1 Rmt circular) and 2 soil workings (4.00 M.D per 100 seedlings) fertilizer application Rs.0.82 per seedling	44.44	18384.38	911.02	19295.40	444.40	183843.84	9110.20	192954.04
6	Watering 1111 seedlings November and December 1 time each, January to March 2 times each per seedlings 5 litre water, purchase of 1111 plastic can of 5 litre/ matka @Rs.25/- each and 100 litre capacity 11 drums @Rs.400/- each for supplying water and water supply at @Rs. 0.05 per litre and wages for watering 1 M.D. for 150 seedlings.	59.25	24511.13	54395.00	78906.13	592.50	245111.33	543950.00	789061.33
7	Casulty replacement (20% 222 Seedlings per ha.) (2 M.D. per 100 Seedlings)	4.44	1836.78	0.00	1836.78	44.40	18367.84	0.00	18367.84
8	Part Nursery cost for causality replacement in SYO (222 Seedlings per ha.) (wages Rs. 11.90 and material supply Rs.3.62 total Rs.12.55 per seedling)	7.77	3214.37	803.64	4018.01	77.70	32143.71	8036.40	40180.11
9	Watch and ward (10 months - 1 watcher per 10 ha)	27.38	11326.83	0.00	11326.83	273.80	113268.32	0.00	113268.32
10	Soil working for naurally gower plants and singling (1.15 M.D per 100 plants)	1.15	475.74	10.00	485.74	11.50	4757.44	100.00	4857.44
11	Fire tracing	2.00	827.38	0.00	827.38	20.00	8273.80	0.00	8273.80
	Total	**192.65**	**79697.38**	**61569.64**	**141267.02**	**1926.50**	**796973.79**	**615696.40**	**1412670.19**
	Contingency 3%				4238.01				42380.11
	Labour Welfare 4%				5650.68				56506.81
	Grand Total	**192.65**	**79697.38**	**61569.64**	**151155.71**	**1926.50**	**796973.79**	**615696.40**	**1511557.10**

Sr. No.	Particulars of works	Area : 1.00 Ha.				Area : 10.00 Ha.			
		Man days	Wages	Material Supply	Total	Man days	Wages	Material Supply	Total
	C. Second Year Operations								
1	Part nursery cost for seedlings for causality repalcement (222 seedlings per ha) labour rate @Rs. 3.77 M.S Rs.1.82 per seedlings.	2.46	1017.68	404.00	1421.68	24.60	10176.77	4040.00	14216.77
2	Tranportation of 222 seedlings for causality replacement from nursery to plantation site (including loading and unloading) wages 0.14 M.D per 100 Seedling & M.S Rs. 1.82 per seedlings	0.31	128.24	404.04	532.28	3.10	1282.44	4040.40	5322.84
3	Planting for casualty replacement 222 seedlings (2.00 M.D. per 100 seedlings)	4.44	1836.78	0.00	1836.78	44.40	18367.84	0.00	18367.84
4	2 Weedings and 1 soil working, with fertilizer application 2.5 M.D. per 100 seedlings at M.S Rs.0.82 per seedling	27.77	11488.17	911.02	12399.19	277.70	114881.71	9110.20	123991.91
5	Watering 1111 seedlings in November, December, January and June 1 time each and in February to May 2 times each total 12 times 5 litre per seedlings, replacing 10% plastic can / matka @Rs.25/- each replacing 111 cans/matka, supplying water @Rs.0.50/- per litre and watering 150 seedlings per M.D.	88.88	36768.77	36105.00	72873.77	888.80	367687.67	361050.00	728737.67
6	Watch and ward 12 months -1 watcher per 10.00 ha	36.50	15099.69	0.00	15099.69	365.00	150996.85	0.00	150996.85
7	Fire tracing	2.00	827.38	0.00	827.38	20.00	8273.80	0.00	8273.80
	Total	**162.360**	**67166.71**	**37824.06**	**104990.77**	**1623.60**	**671667.08**	**378240.60**	**1049907.68**
	Contingency 3%				3149.72				31497.23
	Labour Welfare 4%				4199.63				41996.31
	Grand Total	**162.36**	**67166.71**	**37824.06**	**112340.12**	**1623.60**	**671667.08**	**378240.60**	**1123401.22**

Sr. No.	Particulars of works	Area : 1.00 Ha.				Area : 10.00 Ha.			
		Man days	Wages	Material Supply	Total	Man days	Wages	Material Supply	Total
	D. Third Year Operations								
1	1 weeding and 1 soil working (1.50 M.D per 100 seedlings) applying fertilizer @ Rs.0.82 per plant.	16.67	6896.21	911.02	7807.23	166.70	68962.12	9110.20	78072.32
2	Watering 556 seedlings in November, December, January and June 1 time each and February to may 2 times each total 12 times per seedlings 5 litre, water supply @ Rs.0.50/- litre and watering 150 seedlings per M.D.	44.48	18400.93	16680.00	35080.93	444.80	184009.31	166800.00	350809.31
3	Watch and ward 12 months 1 watcher per 10.00 ha	36.50	15099.69	0.00	15099.69	365.00	150996.85	0.00	150996.85
4	Counting of survival percentage Grid wise and Species wise and to Note the same on Register in May and October.	2.00	827.38	25.00	852.38	20.00	8273.80	250.00	8523.80
5	Fire tracing	2.00	827.38	0.00	827.38	20.00	8273.80	0.00	8273.80
	Total	**101.65**	**42051.59**	**17616.02**	**59667.61**	**1016.50**	**420515.89**	**176160.20**	**596676.09**
	Contingency 3%				1790.03				17900.28
	Labour Welfare 4%				2386.70				23867.04
	Grand Total	**101.65**	**42051.59**	**17616.02**	**63844.34**	**1016.50**	**420515.89**	**176160.20**	**638443.41**
	E. Fourth Year Operations								
1	Watch and ward 12 months 1 watcher per 10.00 ha	36.50	15099.69	0.00	15099.69	365.00	150996.85	0.00	150996.85
2	Counting of survival percentage Grid wise and Specie wise and to Note the same on Register in May and October.	2.00	827.38	25.00	852.38	20.00	8273.80	250.00	8523.80
3	Fire Tracing	2.00	827.38	0.00	827.38	20.00	8273.80	0.00	8273.80
	Total	**40.50**	**16754.45**	**25.00**	**16779.45**	**405.00**	**167544.45**	**250.00**	**167794.45**
	Contingency 3%				503.38				5033.83
	Labour Welfare 4%				671.18				6711.78
	Grand Total	**40.50**	**16754.45**	**25.00**	**17954.01**	**405.00**	**167544.45**	**250.00**	**179540.06**
	F. Fifth Year Operations								
1	Watch and ward 12 months 1 watcher per 10.00 ha	36.50	15099.69	0.00	15099.69	365.00	150996.85	0.00	150996.85
2	Counting of survival percentage Grid wise and Specie wise and to Note the same on Register in May and October.	2.00	827.38	25.00	852.38	20.00	8273.80	250.00	8523.80
3	Fire Tracing	2.00	827.38	0.00	827.38	20.00	8273.80	0.00	8273.80
	Total	**40.50**	**16754.45**	**25.00**	**16779.45**	**405.00**	**167544.45**	**250.00**	**167794.45**
	Contingency 3%				503.38				5033.83
	Labour Welfare 4%				671.18				6711.78
	Grand Total	**40.50**	**16754.45**	**25.00**	**17954.01**	**405.00**	**167544.45**	**250.00**	**179540.06**

Sr. No.	Particulars of works	Area : 1.00 Ha.				Area : 10.00 Ha.			
		Man days	Wages	Material Supply	Total	Man days	Wages	Material Supply	Total
	G. Sixth Year Operations								
1	Watch and ward 12 months 1 watcher per 10.00 ha	36.50	15099.69	0.00	15099.69	365.00	150996.85	0.00	150996.85
2	Counting of survival percentage Grid wise and Specie wise and to Note the same on Register in May and October.	2.00	827.38	25.00	852.38	20.00	8273.80	250.00	8523.80
3	Fire Tracing	2.00	827.38	0.00	827.38	20.00	8273.80	0.00	8273.80
	Total	**40.50**	**16754.45**	**25.00**	**16779.45**	**405.00**	**167544.45**	**250.00**	**167794.45**
	Contingency 3%			0.00	503.38			0.00	5033.83
	Labour Welfare 4%			0.00	671.18			0.00	6711.78
	Grand Total	**40.50**	**16754.45**	**25.00**	**17954.01**	**405.00**	**167544.45**	**250.00**	**179540.06**
	H. Seventh Year Operations								
1	Watch and ward 12 months 1 watcher per 10.00 ha	36.50	15099.69	0.00	15099.69	365.00	150996.85	0.00	150996.85
2	Counting of survival percentage Grid wise and Specie wise and to Note the same on Register in May and October.	2.00	827.38	25.00	852.38	20.00	8273.80	250.00	8523.80
3	Fire Tracing	2.00	827.38	0.00	827.38	20.00	8273.80	0.00	8273.80
	Total	**40.50**	**16754.45**	**25.00**	**16779.45**	**405.00**	**167544.45**	**250.00**	**167794.45**
	Contingency 3%			0.00	503.38			0.00	5033.83
	Labour Welfare 4%			0.00	671.18			0.00	6711.78
	Grand Total	**40.50**	**16754.45**	**25.00**	**17954.01**	**405.00**	**167544.45**	**250.00**	**179540.06**
	I. Eight Year Operations								
1	Watch and ward 12 months 1 watcher per 10.00 ha	36.50	15099.69	0.00	15099.69	365.00	150996.85	0.00	150996.85
2	Counting of survival percentage Grid wise and Specie wise and to Note the same on Register in May and October.	2.00	827.38	25.00	852.38	20.00	8273.80	250.00	8523.80
3	Fire Tracing	2.00	827.38	0.00	827.38	20.00	8273.80	0.00	8273.80
	Total	**40.50**	**16754.45**	**25.00**	**16779.45**	**405.00**	**167544.45**	**250.00**	**167794.45**
	Contingency 3%			0.00	503.38			0.00	5033.83
	Labour Welfare 4%			0.00	671.18			0.00	6711.78
	Grand Total	**40.50**	**16754.45**	**25.00**	**17954.01**	**405.00**	**167544.45**	**250.00**	**179540.06**

Sr. No.	Particulars of works	Area : 1.00 Ha.				Area : 10.00 Ha.			
		Man days	Wages	Material Supply	Total	Man days	Wages	Material Supply	Total
	J. Nine Year Operations								
1	Watch and ward 12 months 1 watcher per 10.00 ha	36.50	15099.69	0.00	15099.69	365.00	150996.85	0.00	150996.85
2	Counting of survival percentage Grid wise and Specie wise and to Note the same on Register in May and October.	2.00	827.38	25.00	852.38	20.00	8273.80	250.00	8523.80
3	Fire Tracing	2.00	827.38	0.00	827.38	20.00	8273.80	0.00	8273.80
	Total	**40.50**	**16754.45**	**25.00**	**16779.45**	**405.00**	**167544.45**	**250.00**	**167794.45**
	Contingency 3%			0.00	503.38			0.00	5033.83
	Labour Welfare 4%			0.00	671.18			0.00	6711.78
	Grand Total	**40.50**	**16754.45**	**25.00**	**17954.01**	**405.00**	**167544.45**	**250.00**	**179540.06**
	K. Tenth Year Operations								
1	Watch and ward 12 months 1 watcher per 10.00 ha	36.50	15099.69	0.00	15099.69	365.00	150996.85	0.00	150996.85
2	Counting of survival percentage Grid wise and Specie wise and to Note the same on Register in May and October.	2.00	827.38	25.00	852.38	20.00	8273.80	250.00	8523.80
3	Fire Tracing	2.00	827.38	0.00	827.38	20.00	8273.80	0.00	8273.80
	Total	**40.50**	**16754.45**	**25.00**	**16779.45**	**405.00**	**167544.45**	**250.00**	**167794.45**
	Contingency 3%			0.00	503.38			0.00	5033.83
	Labour Welfare 4%			0.00	671.18			0.00	6711.78
	Grand Total	**40.50**	**16754.45**	**25.00**	**17954.01**	**405.00**	**167544.45**	**250.00**	**179540.06**

(Keshav Wahle)
Deputy Conservator of Forests,
Nanded Forest Division,
Nanded.

Abstract for Model No. 5
Fencing and Irrigated Plantations
Model Rate Structure for Compensatory Afforestation

Sr. No.	Year of Operation	Area : 1.00 ha. @ wage rate rs. 413.69/day				Area : 10.00 ha.			
		Man days	Wages	Material Supply	Total	Man days	Wages	Material Supply	Total
1	Pre Monsoon Works	167.97	69487.51	193263.83	281143.93	1679.70	694875.09	1887638.30	2763289.33
2	First Year Operations	192.65	79697.38	61569.64	151155.71	1926.50	796973.79	615696.40	1511557.10
3	Second Year Operations	162.36	67166.71	37824.06	112340.12	1623.60	671667.08	378240.60	1123401.22
4	Third Year Operations	101.65	42051.59	17616.02	63844.34	1016.50	420515.89	176160.20	638443.41
5	Fourth Year Operations	40.50	16754.45	25.00	17954.01	405.00	167544.45	250.00	179540.06
6	Fifth Year Operations	40.50	16754.45	25.00	17954.01	405.00	167544.45	250.00	179540.06
7	Sixth Year Operations	40.50	16754.45	25.00	17954.01	405.00	167544.45	250.00	179540.06
8	Seventh Year Operations	40.50	16754.45	25.00	17954.01	405.00	167544.45	250.00	179540.06
9	Eight Year Operations	40.50	16754.45	25.00	17954.01	405.00	167544.45	250.00	179540.06
10	Nineth Year Operations	40.50	16754.45	25.00	17954.01	405.00	167544.45	250.00	179540.06
11	Tenth Year Operations	40.50	16754.45	25.00	17954.01	405.00	167544.45	250.00	179540.06
	Total	**908.13**	**375684.30**	**310448.55**	**734162.15**	**9081.30**	**3756843.00**	**3059485.50**	**7293471.49**

(Keshav Wable)
Deputy Conservator of Forests,
Nanded Forest Division,
Nanded.

Enclosure to Principal Chief Conservator of Forest (HoFF), M.S.Nagpur Letter No.Desk-17/CA/Nodal Cell/CR-40/1127/2019-20, Date 04.10.2019

Model Rate Structure for Compensatory Afforestation

Model No..5

Fencing and Irrigated Plantations

Model rate strucutre for plantation of mixed tree species having rainfall less than 800 mm and medium quality, medium drained soil.

Village - Palsa, Compt No. 394 E, Sur/Gut No.288, Taluka - Hadgaon Dist. Nanded

Spacement	3m x 3m			
Size of Pits	0.45 x 0.45 x 0.45 m	Wage Rate	413.69	per day	Year - 2022-23
No. of Seedlings	1111 per ha.	Proposed Area	15.00	Ha.	

Sr. No.	Particulars of works	Area : 1.00 Ha.				Area : 15.00 Ha.			
		Man days	Wages	Material Supply	Total	Man days	Wages	Material Supply	Total
	A. Pre Mousoon Works PPO/PYO								
1	a.) Survey and demarcation	1.00	413.69	91.00	504.69	15.00	6205.35	1365.00	7570.35
	b.) Preparation of treatment map (100 m x 50 m grid)	1.00	413.69	91.00	504.69	15.00	6205.35	1365.00	7570.35
	c.) Digging trial pits of size 0.30 x 0.30 x 0.60 in corner of Gird.	0.40	165.48	0.00	165.48	6.00	2482.14	0.00	2482.14
	d.) Fixing 60cm x 0.05cm x 12 cm cement pillars upto 30cm deep in corner of Grid, painting with Grid No. etc. complete (3 pillars, Rs.75/- for each pillrs)	0.00	0.00	225.00	225.00	0.00	0.00	3375.00	3375.00
	e.) Clearing of bushes and preparation of site (As per requirement)	10.00	4136.90	91.00	4227.90	150.00	62053.50	1365.00	63418.50
2	Soil and moisture conservation works including collection of rubbles from areas upto 30 m etc	31.00	12824.39	0.00	12824.39	465.00	192365.85	0.00	192365.85
3	Providing and fixing chain link fencing, 102 Rmt per HA (With one gate + two wickets gates for one site) (Rs. 1494/- per Rmt of basic rate+ 20% for transportation of ave. lendplus 20% for tribal/remote area (by tender process.) (Rs.1494+149+149= 1792/- per Rmt (1.60 Rmt height with G.I.Chain link size 50mm x 50m, 8 gauge thick and fixed 75mm above ground level compelete as per SSR item No.1744 for 2017-18	0.00	0.00	182865.60	182865.60	0.00	0.00	2742984.00	2742984.00

Sr. No.	Particulars of works	Area : 1.00 Ha.				Area : 15.00 Ha.			
		Man days	Wages	Material Supply	Total	Man days	Wages	Material Supply	Total
4	Alignment of pits at 3m x 3m spacement 1111 pits per ha. (0.25 per 100 pits and M&S @ Rs.2.24 per 50 pits.	2.78	1150.06	49.77	1199.83	41.70	17250.87	746.55	17997.42
5	Digging of pits of size 0.45 x 0.45 x 0.45 m (1111 pits per ha) 6.60 M.D.per 100 pits. Note :- As per local conditions provision for mechanized digging can be made.	73.33	30335.89	0.00	30335.89	1099.95	455038.32	0.00	455038.32
6	Construction of 5.00 Rmt wide Inspection Path 1M.D. per 100 Rmt	1.00	413.69	0.00	413.69	15.00	6205.35	0.00	6205.35
7	Enumeration of all valuable plant species at plantaiton site and grid wise counting and providing color band and recording the same in Register 0.75 M.D.) per 100 plants	0.75	310.27	25.00	335.27	11.25	4654.01	375.00	5029.01
8	Providing and fixing (4 feet x 3 feet) information board each per site	0.00	0.00	5000.00	5000.00	0.00	0.00	5000.00	5000.00
9	Part Nursery cost of raising 1333 seedings per ha (including 20% casualty replacement) in polygons of size 12.50 x 25.00 cm (wages Rs. 11.90 and M & S Rs. 3.62 per palnt)	46.71	19323.46	4825.46	24148.92	700.65	289851.90	72381.90	362233.80
Total		**167.97**	**69487.51**	**193263.83**	**262751.34**	**2519.55**	**1042312.64**	**2828957.45**	**3871270.09**
Contingency 3%					7882.54				116138.10
Labour Welfare 4%					10510.05				154850.80
Grand Total		**167.97**	**69487.51**	**193263.83**	**281143.93**	**2519.55**	**1042312.64**	**2828957.45**	**4142259.00**

Sr. No.	Particulars of works	Area : 1.00 Ha.				Area : 15.00 Ha.			
		Man days	Wages	Material Supply	Total	Man days	Wages	Material Supply	Total
	B. First Year Operations								
1	Part Nursery cost for maintenance of 1333 seedling per ha Rs.3.77 per seeding (Wages Rs.2.69, M & S Rs. 0.81)	14.80	6122.61	1079.73	7202.34	222.00	91839.18	16195.95	108035.13
2	Refilling of pits by good quality soil including application of single super phosphate (1.66 MD per 100 pits)	18.44	7628.44	1944.23	9572.69	276.60	114426.65	29163.75	143590.40
3	Transportation of 1333 seedings from Nursery to plantation site including loading & unloading (0.14 M.D. per 100 seedlings & M.S. Rs.1.82 per seedlings)	1.87	773.60	2426.00	3199.60	28.05	11604.00	36390.00	47994.00
4	Planting of 1111 seedlings (1.0 M.D. per 100 seedlings)	11.11	4596.10	0.00	4596.10	166.65	68941.44	0.00	68941.44
5	3 seedlings (1 Rmt circular) and 2 soil workings (4.00 M.D per 100 seedlings) fertilizer application Rs.0.82 per seedling	44.44	18384.38	911.02	19295.40	666.60	275765.75	13665.30	289431.05
6	Watering 1111 seedlings November and December 1 time each, January to March 2 times each per seedlings 5 litre water, purchase of 1111 plastic can of 5 litre/ matka @Rs.25/- each and 100 litre capacity 11 drums @Rs.400/- each for supplying water and water supply at @Rs. 0.05 per litre and wages for watering 1 M.D. for 150 seedlings.	59.25	24511.13	54395.00	78906.13	888.75	367666.99	815925.00	1183591.99
7	Casualty replacement (20% 222 Seedlings per ha.) (2 M.D. per 100 Seedlings)	4.44	1836.78	0.00	1836.78	66.60	27551.75	0.00	27551.75
8	Part Nursery cost for causality replacement in SYO (222 Seedlings per ha.) (wages Rs. 11.90 and material supply Rs.3.62 total Rs.12.55 per seedling)	7.77	3214.37	803.64	4018.01	116.55	48215.57	12054.60	60270.17
9	Watch and ward (10 months - 1 watcher per 10 ha)	27.38	11326.83	0.00	11326.83	410.70	169902.48	0.00	169902.48
10	Soil working for naurally gower plants and singling (1.15 M.D per 100 plants)	1.15	475.74	10.00	485.74	17.25	7136.15	150.00	7286.15
11	Fire tracing	2.00	827.38	0.00	827.38	30.00	12410.70	0.00	12410.70
	Total	**192.65**	**79697.38**	**61569.64**	**141267.02**	**2889.75**	**1195460.68**	**923544.60**	**2119005.28**
	Contingency 3%				4238.01				63570.16
	Labour Welfare 4%				5650.68				84760.21
	Grand Total	**192.65**	**79697.38**	**61569.64**	**151155.71**	**2889.75**	**1195460.68**	**923544.60**	**2267335.65**

Sr. No.	Particulars of works	Area : 1.00 Ha.				Area : 15.00 Ha.			
		Man days	Wages	Material Supply	Total	Man days	Wages	Material Supply	Total
	C. Second Year Operations								
1	Part nursery cost for seedlings for causality repilcemem (222 seedlings per ha) labour rate @Rs. 3.77 M.S Rs.1.82 per seedlings.	2.46	1017.68	404.00	1421.68	36.90	15265.16	6060.00	21325.16
2	Tranportation of 222 seedlings for causality replacement from nursery to plantation site (including loading and unloading) wages 0.14 M.D per 100 Seedling & M.S Rs. 1.82 per seedlings	0.31	128.24	404.04	532.28	4.65	1923.66	6060.60	7984.26
3	Planting for casualty replacement 222 seedlings (2.00 M.D. per 100 seedlings)	4.44	1836.78	0.00	1836.78	66.60	27551.75	0.00	27551.75
4	2 Weedings and 1 soil working, with fertilizer application 2.5 M.D. per 100 seedlings at M.S Rs.0.82 per seedling	27.77	11488.17	911.02	12399.19	416.55	172322.57	13665.30	185987.87
5	Watering 1111 seedlings in November, December, January and June 1 time each and in February to May 2 times each total 12 times 5 litre per seedlings, replacing 10% plastic can / matka @Rs.25/- each replacing 111 cans/matka, supplying water @Rs.0.50/- per litre and watering 150 seedlings per M.D.	88.88	36768.77	36105.00	72873.77	1333.20	551531.51	541575.00	1093106.51
6	Watch and ward 12 months -1 watcher per 10.00 ha	36.50	15099.69	0.00	15099.69	547.50	226495.28	0.00	226495.28
7	Fire tracing	2.00	827.38	0.00	827.38	30.00	12410.70	0.00	12410.70
	Total	**162.360**	**67166.71**	**37824.06**	**104990.77**	**2435.40**	**1007500.63**	**567360.90**	**1574861.53**
	Contingency 3%				3149.72				47245.85
	Labour Welfare 4%				4199.63				62994.46
	Grand Total	**162.36**	**67166.71**	**37824.06**	**112340.12**	**2435.40**	**1007500.63**	**567360.90**	**1685101.83**

Sr. No.	Particulars of works	Area : 1.00 Ha.				Area : 15.00 Ha.			
		Man days	Wages	Material Supply	Total	Man days	Wages	Material Supply	Total
	D. Third Year Operations								
1	1 weeding and 1 soil working (1.50 M.D per 100 seedlings) applying fertilizer @ Rs.0.82 per plant.	16.67	6896.21	911.02	7807.23	250.05	103443.18	13665.30	117108.48
2	Watering 556 seedlings in November, December, January and June 1 time each and February to may 2 times each total 12 times per seedlings 5 litre, water supply @ Rs.0.50/- litre and watering 150 seedlings per M.D.	44.48	18400.93	16680.00	35080.93	667.20	276013.97	250200.00	526213.97
3	Watch and ward 12 months 1 watcher per 10.00 ha	36.50	15099.69	0.00	15099.69	547.50	226495.28	0.00	226495.28
4	Counting of survival percentage Grid wise and Species wise and to Note the same on Register in May and October.	2.00	827.38	25.00	852.38	30.00	12410.70	375.00	12785.70
5	Fire tracing	2.00	827.38	0.00	827.38	30.00	12410.70	0.00	12410.70
	Total	**101.65**	**42051.59**	**17616.02**	**59667.61**	**1524.75**	**630773.83**	**264240.30**	**895014.13**
	Contingency 3%				1790.03				26850.42
	Labour Welfare 4%				2386.70				35800.57
	Grand Total	**101.65**	**42051.59**	**17616.02**	**63844.34**	**1524.75**	**630773.83**	**264240.30**	**957665.12**
	E. Fourth Year Operations								
1	Watch and ward 12 months 1 watcher per 10.00 ha	36.50	15099.69	0.00	15099.69	547.50	226495.28	0.00	226495.28
2	Counting of survival percentage Grid wise and Specie wise and to Note the same on Register in May and October.	2.00	827.38	25.00	852.38	30.00	12410.70	375.00	12785.70
3	Fire Tracing	2.00	827.38	0.00	827.38	30.00	12410.70	0.00	12410.70
	Total	**40.50**	**16754.45**	**25.00**	**16779.45**	**607.50**	**251316.68**	**375.00**	**251691.68**
	Contingency 3%				503.38				7550.75
	Labour Welfare 4%				671.18				10067.67
	Grand Total	**40.50**	**16754.45**	**25.00**	**17954.01**	**607.50**	**251316.68**	**375.00**	**269310.09**
	F. Fifth Year Operations								
1	Watch and ward 12 months 1 watcher per 10.00 ha	36.50	15099.69	0.00	15099.69	547.50	226495.28	0.00	226495.28
2	Counting of survival percentage Grid wise and Specie wise and to Note the same on Register in May and October.	2.00	827.38	25.00	852.38	30.00	12410.70	375.00	12785.70
3	Fire Tracing	2.00	827.38	0.00	827.38	30.00	12410.70	0.00	12410.70
	Total	**40.50**	**16754.45**	**25.00**	**16779.45**	**607.50**	**251316.68**	**375.00**	**251691.68**
	Contingency 3%				503.38				7550.75
	Labour Welfare 4%				671.18				10067.67
	Grand Total	**40.50**	**16754.45**	**25.00**	**17954.01**	**607.50**	**251316.68**	**375.00**	**269310.09**

Sr. No.	Particulars of works	Area : 1.00 Ha.				Area : 15.00 Ha.			
		Man days	Wages	Material Supply	Total	Man days	Wages	Material Supply	Total
	G. Sixth Year Operations								
1	Watch and ward 12 months 1 watcher per 10.00 ha	36.50	15099.69	0.00	15099.69	547.50	226495.28	0.00	226495.28
2	Counting of survival percentage Grid wise and Specie wise and to Note the same on Register in May and October.	2.00	827.38	25.00	852.38	30.00	12410.70	375.00	12785.70
3	Fire Tracing	2.00	827.38	0.00	827.38	30.00	12410.70	0.00	12410.70
	Total	**40.50**	**16754.45**	**25.00**	**16779.45**	**607.50**	**251316.68**	**375.00**	**251691.68**
	Contingency 3%			0.00	503.38			0.00	7550.75
	Labour Welfare 4%			0.00	671.18			0.00	10067.67
	Grand Total	**40.50**	**16754.45**	**25.00**	**17954.01**	**607.50**	**251316.68**	**375.00**	**269310.09**
	H. Seventh Year Operations								
1	Watch and ward 12 months 1 watcher per 10.00 ha	36.50	15099.69	0.00	15099.69	547.50	226495.28	0.00	226495.28
2	Counting of survival percentage Grid wise and Specie wise and to Note the same on Register in May and October.	2.00	827.38	25.00	852.38	30.00	12410.70	375.00	12785.70
3	Fire Tracing	2.00	827.38	0.00	827.38	30.00	12410.70	0.00	12410.70
	Total	**40.50**	**16754.45**	**25.00**	**16779.45**	**607.50**	**251316.68**	**375.00**	**251691.68**
	Contingency 3%			0.00	503.38			0.00	7550.75
	Labour Welfare 4%			0.00	671.18			0.00	10067.67
	Grand Total	**40.50**	**16754.45**	**25.00**	**17954.01**	**607.50**	**251316.68**	**375.00**	**269310.09**
	I. Eight Year Operations								
1	Watch and ward 12 months 1 watcher per 10.00 ha	36.50	15099.69	0.00	15099.69	547.50	226495.28	0.00	226495.28
2	Counting of survival percentage Grid wise and Specie wise and to Note the same on Register in May and October.	2.00	827.38	25.00	852.38	30.00	12410.70	375.00	12785.70
3	Fire Tracing	2.00	827.38	0.00	827.38	30.00	12410.70	0.00	12410.70
	Total	**40.50**	**16754.45**	**25.00**	**16779.45**	**607.50**	**251316.68**	**375.00**	**251691.68**
	Contingency 3%			0.00	503.38			0.00	7550.75
	Labour Welfare 4%			0.00	671.18			0.00	10067.67
	Grand Total	**40.50**	**16754.45**	**25.00**	**17954.01**	**607.50**	**251316.68**	**375.00**	**269310.09**

Sr. No.	Particulars of works	Area : 1.00 Ha.				Area : 15.00 Ha.			
		Man days	Wages	Material Supply	Total	Man days	Wages	Material Supply	Total
	J. Nine Year Operations								
1	Watch and ward 12 months 1 watcher per 10.00 ha	36.50	15099.69	0.00	15099.69	547.50	226495.28	0.00	226495.28
2	Counting of survival percentage Grid wise and Specie wise and to Note the same on Register in May and October.	2.00	827.38	25.00	852.38	30.00	12410.70	375.00	12785.70
3	Fire Tracing	2.00	827.38	0.00	827.38	30.00	12410.70	0.00	12410.70
	Total	**40.50**	**16754.45**	**25.00**	**16779.45**	**607.50**	**251316.68**	**375.00**	**251691.68**
	Contingency 3%			0.00	503.38			0.00	7550.75
	Labour Welfare 4%			0.00	671.18			0.00	10067.67
	Grand Total	**40.50**	**16754.45**	**25.00**	**17954.01**	**607.50**	**251316.68**	**375.00**	**269310.09**
	K. Tenth Year Operations								
1	Watch and ward 12 months 1 watcher per 10.00 ha	36.50	15099.69	0.00	15099.69	547.50	226495.28	0.00	226495.28
2	Counting of survival percentage Grid wise and Specie wise and to Note the same on Register in May and October.	2.00	827.38	25.00	852.38	30.00	12410.70	375.00	12785.70
3	Fire Tracing	2.00	827.38	0.00	827.38	30.00	12410.70	0.00	12410.70
	Total	**40.50**	**16754.45**	**25.00**	**16779.45**	**607.50**	**251316.68**	**375.00**	**251691.68**
	Contingency 3%			0.00	503.38			0.00	7550.75
	Labour Welfare 4%			0.00	671.18			0.00	10067.67
	Grand Total	**40.50**	**16754.45**	**25.00**	**17954.01**	**607.50**	**251316.68**	**375.00**	**269310.09**

(Keshav Wable)
Deputy Conservator of Forests,
Nanded Forest Division,
Nanded

Abstract for Model No. 5
Fencing and Irrigated Plantations
Model Rate Structure for Compensatory Afforestation

Sr. No.	Year of Operation	Area : 1.00 ha. @ wage rate rs. 413.69/day				Area : 15.00 ha.			
		Man days	Wages	Material Supply	Total	Man days	Wages	Material Supply	Total
1	Pre Monsoon Works	167.97	69487.51	193263.83	281143.93	2519.55	1042312.64	2828957.45	4142259.00
2	First Year Operations	192.65	79697.38	61569.64	151155.71	2889.75	1195460.68	923544.60	2267335.65
3	Second Year Operations	162.36	67166.71	37824.06	112340.12	2435.40	1007500.63	567360.90	1685101.83
4	Third Year Operations	101.65	42051.59	17616.02	63844.34	1524.75	630773.83	264240.30	957665.12
5	Fourth Year Operations	40.50	16754.45	25.00	17954.01	607.50	251316.68	375.00	269310.09
6	Fifth Year Operations	40.50	16754.45	25.00	17954.01	607.50	251316.68	375.00	269310.09
7	Sixth Year Operations	40.50	16754.45	25.00	17954.01	607.50	251316.68	375.00	269310.09
8	Seventh Year Operations	40.50	16754.45	25.00	17954.01	607.50	251316.68	375.00	269310.09
9	Eight Year Operations	40.50	16754.45	25.00	17954.01	607.50	251316.68	375.00	269310.09
10	Nineth Year Operations	40.50	16754.45	25.00	17954.01	607.50	251316.68	375.00	269310.09
11	Tenth Year Operations	40.50	16754.45	25.00	17954.01	607.50	251316.68	375.00	269310.09
	Total	**908.13**	**375684.30**	**310448.55**	**734162.15**	**13621.95**	**5635264.50**	**4586728.25**	**10937532.24**

(Keshav Wable)
Deputy Conservator of Forests,
Nanded Forest Division,
Nanded.

दुरध्वनी क्र. 022-25421373
ईमेल- acfbhiwandi@gmail.com

महाराष्ट्र शासन
वन विभाग
सहा. वनसंरक्षक भिवंडी, मुख्यालय ठाणे यांचे कार्यालय
मॅरिथॉन मर्कल, लाल बहादूर शास्त्री मार्ग, नौपाडा, ठाणे-400 602

पत्र जा.क्र. अ/सवसं/भिवंडी/ 342 /सन 2025-26 दिनांक - 08 /10 / 2025

प्रति,

उप वनसंरक्षक,
ठाणे वनविभाग, ठाणे

विषय : Diversion of १२.०२२५ Ha Forest Land in favour of EHV project Division Kalyan for Construction and laying of २२० KV LILO M/C Transmission line on २२० KV Padghe Wada & Kolshet Wada Tr.line for ४०० KV Kudus Sub Station Passing Throgh Village Eksal, Chichavali, Kunde,& Dighashi Taluka Bhiwandi District Thane in the State of Maharashtra.

संदर्भ : वनक्षेत्रपाल पडघा यांचेकडील पत्र जा.क्र. ता.मा/ 453/ सन 2025-26 दि.03/10/025

उपरोक्त विषयांकित प्रकरणी पडघा वनक्षेत्रातील कुंदे दिघाशी संरक्षित वन म.नं.292/26, 292/1,293/3, 293/2, 293/1, 54 pt,211/4अ,2015 व कुमापुर,चिचवली संरक्षित वन म.नं.78, 7 G.No.51 & 52 Construction of Concrete Bondry Pillar ची अंदाजपत्रके तांत्रिक मंजूरीसह प्रशासकीय मंजूरी करीता सादर केली आहेत. तरी सदर अंदाजपत्रके प्रशासकीय मंजूरी सह सोबत जोडून पुढील कार्यवाहीकरीता सविनय सादर करण्यात येत आहे.

अ. क्रं	कामाचे नाव	कामाचे ठिकाण	तांत्रिक मान्यतेची रक्कम	तांत्रिक मान्यता क्रं	प्रशासकीय मान्यता क्रं.	शेरा
१	Construction of Concrete Bondry Pillar	कुंदे दिघाशी संरक्षित वन म.नं.292/26, 292/1,293/3, 293/2, 293/1, 54 pt,211/4अ,2015	९११३६०	DYEF/TS/ No.११६१/ Dt.०३.१०.२०२५	Acf Bhiwandi A.S.no.७३/ Dt.०६/१०/२०२५	
२	Construction of Concrete Bondry Pillar	कुमापुर,चिचवली संरक्षित वन म.नं.78, 7 G.No.51 & 52	९९७४००	DYEF/TS/ No.११६२/ Dt.०३.१०.२०२५	Acf Bhiwandi A.S.no.७४/ Dt.०६/१०/२०२५	
		एकूण	१९०८७६०			

सहपत्र- वरीलप्रमाणे

(अशोक चिरमे)
सहा. वनसंरक्षक भिवंडी
मुख्यालय ठाणे

D:\Suyash\acf mandvi2 (1).docx

वनपरिक्षेत्र अधिकारी, पडघा यांचे कार्यालय

निजाई हॉस्पिटलचे समोर, पडघा भिवंडी रोड, पडघा, ता. भिवंडी, Email- rfopadgha@gmail.com

विषय : Diversion of १२.०२२५ Ha Forest Land in favour of EHV project Division Kalyan for Construction and laying of २२० KV LILO M/C Transmission line on २२० KV Padghe Wada & Kolshet Wada Tr.line for ४०० KV Kudus Sub Station Passing Throgh Village Eksal,Chichavali,Kunde,& Dighashi Taluka Bhiwandi District Thane in the State of Maharshtra

जा.क्र. कक्ष-/ ता.म / 843 / सन २०२५-२६

पडघा - ४२१ १०१ दिनांक 03/10/२०२५

प्रति,

मा.उप वनसंरक्षक

ठाणे, वनविभाग ठाणे

(मा.सहा.वनसंरक्षक भिवंडी यांचे मार्फत सविनय सादर)

संदर्भ- १. केंद्र शासनाकडील पत्र क्र FC-II/MH-२०१/२०२५-NGP/१४६१० fn ०२.०८.२०२५

२.आपलेकडील पत्र क्रमांक कक्ष-२५/ब/मोजणी/एफसीए/२७०२/ दिनांक ११.०९.२०२५

३.मा उप वन अभियंता ठाणे वनवृत्त ठाणे यांचेकडील पत्र क्र कक्ष-४/अभियंता/१९२/दि ०३.१०.२०२५

उपरोक्त संदर्भिय विषयान्वये वनपरिक्षेत्र पडघा मध्ये वन (संरक्षण एवमं संवर्धन)अधिनियम अतर्गत Diversion of १२.०२२५ Ha Forest Land in favour of EHV project Division Kalyan for Construction and laying of २२० KV LILO M/C Transmission line on २२० KV Padghe Wada & Kolshet Wada Tr.line for ४०० KV Kudus Sub Station Passing Throgh Village Eksal,Chichavali,Kunde,& Dighashi Taluka Bhiwandi District Thane वन जमिन मागणी प्रस्तावास केंद्र शासनाकडुन उपरोक्त संदर्भ पत्र क्र १ अन्वये १ ते २४ अटी व शर्तीच्या अधिन राहुन तत्वता मंजुरी मिळाली आहे.उपरोक्त संदर्भ क्र २ अन्वये कळविल्यानुसार केंद्र शासनाकडील तत्वता मंजुरी पत्रातील अट क्र २ नुसार सिमांकन करणे कामा अतर्गत Construction Of Concrete Boundary Pillars कामांची अदांजपत्रके या कार्यालयाकडुन तयार करण्यात येवुन उपरोक्त संदर्भ क्र ३ अन्वये प्राधिकृत अधिकारी यांचेकडुन तांत्रिक मान्यता घेण्यात येवुन सदरचे अदाजपत्रकें पुढील कार्यवाही कामी सविनय सादर करण्यात येत आहे.

अ.क्र	कामाचा नाव	कामाचे ठिकाण	तांत्रिक मान्यतेची रक्कम	तांत्रिक मान्यतेचा तपशिल	शेरा
1	Construction Of Concrete Boundary Pillars	कुंदे,दिघाशी संरक्षित वन स.न २९२/२६,२९२/१,२९३/३,२९३/३,२९३/२, २९३/१,५४pt,२११/४ अ,२१५	911360/-	DYFE/TS/1161 Dt 03.10.2025	
2	Construction Of Concrete Boundary Pillars	कुसापुर ,चिचवली संरक्षित वन स.न ७८ , ७ & ८ ,G.No ५१ & ५२ ,	997400/-	DYFE/TS/1162 Dt 03.10.2025	
		एकुण -	**1908760/-**		

सहपत्र - ०२ अंदाजपत्रक

वनपरिक्षेत्र अधिकारी

पडघा (सं) ता. भिवंडी

महाराष्ट्र वन विभाग

GOVERNMENT OF MAHARASHTRA

FOREST DEPARTMENT

ALIBAG

DETAILED ESTIMATE AND PLAN

NAME OF WORK :-Construction of Concrete Boundary Pillars Class I & Class II In Village Kunde and Dighashi S.N. 292/26,292/1,293/3,293/2,293/1, 54 part, 211/4A & 215 In Beat In Round Dighashi In Range Padgha, Forest Division Thane (Area

ESTIMATED COST: **Rs 911365**

SSR 2022-23

FACE SHEET

[illegible] 11.10.16

[illegible]

[illegible]

[illegible]

[illegible]

[illegible]

[illegible]

[illegible]

NAME OF WORK : Construction of Concrete Boundary Pillars Class I & Class II In Village Kunda and Dighawlo N.V. 292:26,292:1,290:3,293:2,294:1, 84 pers, 211/4 & 215 In Beat In Round Dighawlo In Range Pulgaon, Forest Division Thane (Area 3.5105+0.3625 = 12.873 km.)

911,365.00

[illegible] Days

[illegible] Days

[illegible]

[illegible] 11.10.16

[illegible]

[illegible]

[illegible]

[illegible]

Range Forest Officer
Pulgaon

GENERAL REPORT

[illegible]

[illegible]	[illegible]
[illegible]	[illegible]
[illegible]	[illegible]
[illegible]	[illegible]
[illegible]	[illegible]
[illegible]	
[illegible]	[illegible]
[illegible]	
[illegible]	
[illegible]	
[illegible]	
[illegible]	
[illegible]	[illegible]
[illegible]	[illegible]

[illegible]
[illegible]

RECAPUTILATION SHEET

NAME OF WORK :-Construction of Concrete Boundary Pillars Class I & Class II In Village Kunde and Dighashi S.N. 292 26,292 1,293 3,293 2,293 1, 54 part, 211 4A & 215 In Beat In Round Dighashi In Range Padgha, Forest Division Thane (Area 3.5105 + 9.3625 = 12.873 ha.)

Cost of Proper Civil Work Portion	Rs.	744,502.00
Add 18 % for G.S.T.	Rs.	134,010.36
Insurance 0.50%	Rs.	3,722.51
Add Royalty Charges	Rs.	6,105.00
Add Quality Control Charges	Rs.	690.00
Add 3% Contingencies on	Rs.	22,335.06
Total	Rs.	911,364.93

Total Amount Rs. 911,365

Say Rs. 911360/-

Range Forest Officer
Padgha

RANGE FOREST OFFICER
PADGHA (Protection)

Technically Sanctioned for Rs. 911360/-
(Rs. Nine lakh eleven thousand three hundred & Sixty) only under this office No. DYFE(TS)/1161, dt. 03/10/2025

Dy Forest Engineer
Thane Circle, Thane

Administration Sanction for Rs. 9,11,360/- Rs:- nine lack eleven thousand three sixty only/- under this office No:- 73 Dt:- 06/10/2025

सहा. वनसंरक्षक
भिवंडी (मुख्यालय - ठाणे)

Scanned with CamScanner

NAME OF WORK :-Construction of Concrete Boundary Pillars Class I & Class II In Village Kunde and Dighashi S.N. 292/26,292/1,293/3,293/2,293/1, 54 part, 211/4A & 215 In Beat In Round Dighashi In Range Padgha, Forest Division Thane (Area 3.5105+9.3625 = 12.873 ha,)

RA 1st and Final Bill

Quantity	Item No.	Description	Rate	Unit	Amount
1	2	3	4	5	6
173.79	1	*Removing grass, gazer grass and disposing off out of building premises including making clean the ground by shovel and phavaras etc. complete.*	6.45	Square Metre	1,120.
26.38	2	*Excavation for foundation in earth, soil of all types, sand, gravel and soft murum, including removing the excavated material up to a distance of 50 m. beyond the building area and stacking and spreading as directed, dewatering, preparing the bed for the foundation and necessary back filling, ramming, watering including shoring and strutting etc. complete. (Lift upto 3.00 m.) By Manual Means*	257.90	Cubic Metre	6,803.
50.76	3	*Providing cast in situ / ready mix M10 grade cement concrete for head walls of CD work / retaining walls etc. including necessary form work, compaction, finishing and curing etc. complete. (with reversible drum type mixer/ concrete batch mix plant (pan mixer) with SCADA with fine agreegates of required specifications (Natural sand / VSI sand finely washed etc), cement 4.05 bags/cumt)*	10032.75	Cubic Meter	509,262.
244.85	4	*Providing internal cement plaster 6 mm thick in a single coat in cement mortar 1:4 without neeru finish to concrete surface in all positions including scaffolding and curing etc. complete.*	223.70	Square Metre	54,772.

Quantity	Item No.	Description	Rate	Unit	Amount
24.34	6	*Providing and applying two coats of flat oil paint of approved colour and shade to internal / external plastered surfaces including scaffolding if necessary, cleaning and preparing the surface (excluding primer coat) etc. complete.*	109.00	Square Metre	2,653.
2944.00	7	*Painting letters upto 20 cm height complete brushes, coir brushers, dusting, cleaning, including cost of paint etc. complete.*	31.30	Number	92,147.
244.24	8	*Providing and applying two coats of exterior weather shield paint of approved manufacture and of approved colour to the plastered surfaces including cleaning ,preparing the plaster surface ,applying primer coat ,scaffolding if necessary, and watering the surface for two days etc complete.* *NOTE: For Item Number 15 to 18 prior approval of Superintending Engineer will be necessary*	318.30	Square Metre	77,741.
				Total Amount Rs.	**744,502**

Range Forest Officer
Padgha

NAME OF WORK :-Construction of Concrete Boundary Pillars Class I & Class II In Village Kunde and Dighashi S.N. 292/26,292/1,293/3,293/2,293/1, 54 part, 211/4A & 215 In Beat In Round Dighashi In Range Padgha, Forest Division Thane (Area 3.5105+9.3625 = 12.873 ha.)

Mesurement Sheet

ITEM OF WORK	NO	L	B	D/H	QTY.	Unit
ITEM NO.1		*21.54*				
Removing grass, gazer grass and disposing off out of building premises including making clean the ground by shovel and plus uras etc. complete.						
As directed by Engineer in						
class I Pillar						
474 S.N Co.No.	51	1	1.50	1.50	114.75	Sq.M
Total pillars	**51**					
Class II Pillar						
474 S.N/Co.No	41	1	1.20	1.20	59.04	Sq.M
Total pillars	**41**					
Square Metre				*Net Qty.*	*173.79*	*Sq.M*
ITEM NO.2		*21.01*				
Excavation for foundation in earth, soil of all types, sand, gravel and soft murum, including removing the excavated material up to a distance of 50 m. beyond the building area and stacking and spreading as directed, dewatering, preparing the bed for the foundation and necessary back						
Rd. 4.1 Page Number 259						
class I Pillar						
	52	1.10	1.10	0.30	18.51	Cum
Class II Pillar						
	41	0.80	0.80	0.30	7.87	Cum
				Total	*26.38*	Cum
Cubic Metre				*Net Qty.*	*26.38*	*Cum*
ITEM NO.3		*11.28*				
Providing cast in situ / ready mix M10 grade cement concrete for head walls of C.D work / retaining walls etc. including necessary form work, compaction, finishing and curing etc. complete (with reversible drum type mixer/ concrete batch mix plant (pan mixer) with SCAD.1 with fine agreegates of required specifications (Natural sand / VSI sand finely washed etc), cement 4.05						
CD 8 Page 163						
class I Pillar						
volumn of pillar						
H/3 (A1+A2 + √A1 * A2			1.30/3 (0.36+0.81 +√0.36*0.81		0.74	
A1 0.60X0.60 0.36 SQ.MT. A2						
0.90X0.90 0.81 SQ.MT H 1.30						
	51	0.741			37.79	Cu.M
	51	0.23	0.23	0.33	0.62	Cu.M

ITEM OF WORK	NO	L	B	D/H	QTY.	Unit
class II Pillar						
volumn of pillar						
=H3 (A1+A2+ √A1*A2				1.05-3 (0.2+0.36+ √0.2*0.36)		
A1 0.45X0.45 = 0.20 SQ.MT. A2				=0.289		
0.60X0.60 = 0.36 SQ.MT H = 1.05						
	41	0.289			11.85	Cu.M
	41	0.23	0.23	0.23	0.50	Cu.M
Cubic Meter				**Net Qty.**	**50.76**	**Cum**

ITEM NO.4 *32.01*

Providing internal cement plaster 6 mm thick in a single coat in cement mortar 1:4 without neeru finish to
concrete surface in all positions including scaffolding and curing etc. complete.

Bd.L.1 Page Number 367

class I Pillar						
=4*(0.9+0.6)(2)*1.3=5.9	51	4	0.75	1.00	153.00	Sq.M
Top Area	51	1	0.60	0.60	18.36	Sq.M
class II Pillar						
= 4*(0.6+0.45)(2)*1.05 = 3.38	41	4	0.52	0.75	65.19	Sq.M
Top Area	41	1	0.45	0.45	8.30	Sq.M
Square Metre				**Net Qty.**	**244.85**	**Sqm**

ITEM NO.5 *35.12*

Providing and applying two coats of flat oil paint of approved colour and shade to internal / external plastered surfaces including scaffolding if necessary, cleaning and preparing the surface (excluding primer coat)
etc. complete.

Bd.O.7 Page Number 406

class I Pillar						
Top Stone Side	51	4	0.23	0.23	10.79	Sq.M
Top Stone Top	51	1	0.23	0.23	2.70	Sq.M
class II Pillar						
Top Stone Side	41	4	0.23	0.23	8.68	Sq.M
Top Stone Top	41	1	0.23	0.23	2.17	Sq.M
Square Metre				**Net Qty.**	**24.34**	**Sq.M**

ITEM NO.6 *6.05*

Painting letters upto 20 cm height complete brushes, coir brushers, dusting, cleaning, including cost of paint
etc. complete.

MORTH 801

class I Pillar	51	8	4	1632.00	Nos
class II Pillar	41	8	4	1312.00	Nos

ITEM OF WORK	NO	L	B	D/H	QTY.	Unit
Number				Net Qty.	2944.00	Nos

ITEM NO.7 *35.26*

Providing and applying two coats of exterior weather shield paint of approved manufacture and of approved colour to the plastered surfaces including cleaning ,preparing the plaster surface ,applying primer coat

,scaffolding if necessary, and watering the surface for two days etc complete.

NOTE: For

Item Number 15 to 18 prior approval of Superintending Engineer will be necessary

As directed by Engineer in charge.

= 4*((0.9+0.6)/2)*1.3=3.9	51	4	0.75	1.00	153.00	Sq.M
Top Area	51	1	0.60	0.60	18.36	Sq.M
class II Pillar						
= 4*((0.6+0.45)/2)*1.05=3.38	41	4	0.53	0.75	64.58	Sq.M
Top Area	41	1	0.45	0.45	8.30	Sq.M
Square Metre				**Net Qty.**	**244.240**	**Sq.M**

Range Forest Officer
Padgha

NAME OF WORK :-Construction of Concrete Boundary Pillars Class I & Class II In Village Kunde and Dighashi S.N. 292/26,292/1,293/3,293/2,293/1, 54 part, 211/4A & 215 In Beat In Round Dighashi In Range Padgha, Forest Division Thane (Area 3.5105+9.3625 = 12.873 ha,)

Rate Analysis -As per SSR 2022-23

SR.NO	SSR ITEM NO	Description of the item	Unit	Rate	Deduct 21% labour cess and over head charges	Deduct For SCADA For Concrete items	Sub Total	Add 10% for Tribal Area	ADD CARTING OF MATERIAL AS PER LATEST RATE							Total	Add labour cess and overhead chargesprevionsly deducted	Final Rate Adopted
									Buld.			Rd						
									Cement	20.00	17.41							
									Sand	20.00	488.73							
									Metal	20.00	488.73							
									Bricks	10.00	0.76							
									Stone	20.00	597.92							
									Murum	20.00	468.37							
									Steel	50.00	645.53							
									Tiles	50.00	64.55							
					21.00%	126		10.00%	Sand	Amt	Cement	Amt.	Metal	Amt	Trasportation charges			
1	21.34	Removing grass, gazer grass and disposing off	Square Metre	6	1.26	0.00	4.7	0.47	0	0	0	0	0	0	0.00	0.00	1.26	6.45
2	21.01	Excavation for foundation in earth, soil of all types, sand, gravel and soft	Cubic Metre	239	50.19	0.00	188.81	18.88	0	0	0	0	0	0	0.00	0.00	50.19	257.90
3	11.28	Providing cast in situ / ready mix M10 grade cement concrete for head	Cubic Meter	8717	1830.57	126.00	6760.43	676.94	0.47	229.7	4.4	76.6	0.94	459.41	765.71	765.71	1830.57	10022.75
4	32.01	Providing internal cement plaster 6 mm thick in a	Square Metre	203	42.63	0.00	160.37	16.04	0.0076	3.714	0.054	0.94	0	0	4.65	4.65	42.63	223.70
6	35.12	Providing and applying two coats of flat oil paint	Square Metre	101	21.21	0.00	79.79	7.98	0	0	0	0	0	0	0.00	0.00	21.21	109.00
7	6.05	Painting letters upto 20 cm height complete brushes, coir brushers, dusting,	Number	29	6.09	0.00	22.91	2.29	0	0	0	0	0	0	0.00	0.00	6.09	31.30
8	35.26	Providing and applying two coats of exterior weather shield paint of	Square Metre	295	61.95	0.00	233.05	23.31	0	0	0	0	0	0	0.00	0.00	61.95	318.30

Range Forest Officer
Padgha

NAME OF WORK :-Construction of Concrete Boundary Pillars Class I & Class II In Village Kunde and Dighashi S.N. 292/26,292/1,293/3,293/2,293/1, 54 part, 211/4A & 215 In Beat In Round Dighashi In Range Padgha, Forest Division Thane (Area 3.5105+9.3625 = 12.873 ha.)

Lead Charges State SSR 2022-23

Sr. No	Materials	Location	Lead in Kms	Lead Charges Rs.	Unit	Total Lead Charges Rs.
1	Murrum, Building Rubish, Earth		20	468.37	Cu.M	468.37
2	Excavated Rock soling stone		20	597.92	Cu.M	597.92
3	Sand,		20	488.73	Cu.M	488.73
4	Stone below 40 mm,		20	488.73	Cu.M	488.73
5	Stone aggregate 40mm above		20	468.37	Cu.M	468.37
6	Cement, Lime		20	348.11	M.T	348.11
	Cement,				Per Bag	17.41

Range Forest Officer
Padgha

Royalty Statement

NAME OF WORK :-Construction of Concrete Boundary Pillars Class I & Class II In Village Kunde and Dighashi S.N. 292/26,292/1,293/3,293/2,293/1, 54 part, 211/4A & 215 In Beat In Round Dighashi In Range Padgha, Forest Division Thane (Area 3.5105+9.3625 = 12.873 ha)

Sr.No	SSR Item No	Description of the Item	Unit	Total Qty.of Item	Murum		Sand		Rubble	
					Coefi.	Qty	Coefi.	Qty	Coefi.	Qty
1	21.34	Removing grass, gazer grass and disposing off out of building premises including making clean the	Square Metre	173.79	0.00	0.00	0.000	0.00	0.00	0.00
2	21.01	Excavation for foundation in earth, soil of all types, sand, gravel and soft murum, including removing the	Cubic Metre	26.38	0.00	0.00	0.000	0.00	0.00	0.00
3	11.28	Providing cast in situ / ready mix M10 grade cement concrete for head walls of CD work / retaining walls etc.	Cubic Meter	50.76	0.00	0.00	0.470	23.86	0.00	0.00
4	32.01	Providing internal cement plaster 6 mm thick in a single coat in cement mortar 1:4 without neeru finish to	Square Metre	244.85	0.00	0.00	0.008	1.86	0.00	0.00
6	35.12	Providing and applying two coats of flat oil paint of approved colour and shade to internal / external	Square Metre	24.34	0.00	0.00	0.000	0.00	0.00	0.00
7	6.05	Painting letters upto 20 cm height complete brushes, coir brushers, dusting, cleaning, including cost of paint	Number	2944.00	0.00	0.00	0.000	0.00	0.00	0.00
8	35.26	Providing and applying two coats of exterior weather shield paint of approved manufacture and of approved	Square Metre	244.24	0.00	0.00	0.000	0.00	0.00	0.00
				Total Qty.		0.00		25.72		0.00
				Royalty Charges per Cum		216.18		237.37		216.18
				Deduct Royalty Amount Rs.		0.00		6104.70		0.00
				Total Amount Rs.	6105.00					

Range Forest Officer
Padgha

NAME OF WORK :-Construction of Concrete Boundary Pillars Class I & Class II In Village Kunde and Dighashi S.N. 292/26,292/1,293/3,293/2,293/1, 54 part, 211/4A & 215 In Beat In Round Dighashi In Range Padgha, Forest Division Thane (Area 3.5105+9.3625 = 12.873 ha.)

Sub Estimate - Material Testing

Test Report

Sr. No.	Description of material	As per V.Q.C. Norms		No.of test required	Rate	Amount	Remark
		Type of test	Frequency of test				
1	2	4	5	6	7	8	9
1	Cement concret M-10	Compression Strength Of CC Cube (set of 3 cubes)		1	690	690.00	
				Total Amount Rs.		690.00	

Range Forest Officer
Padgha

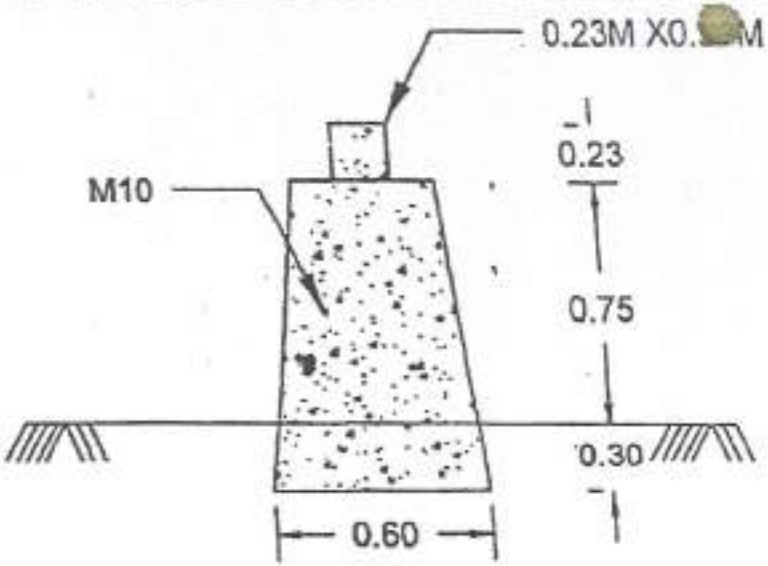

SECTONAL ELEVATION

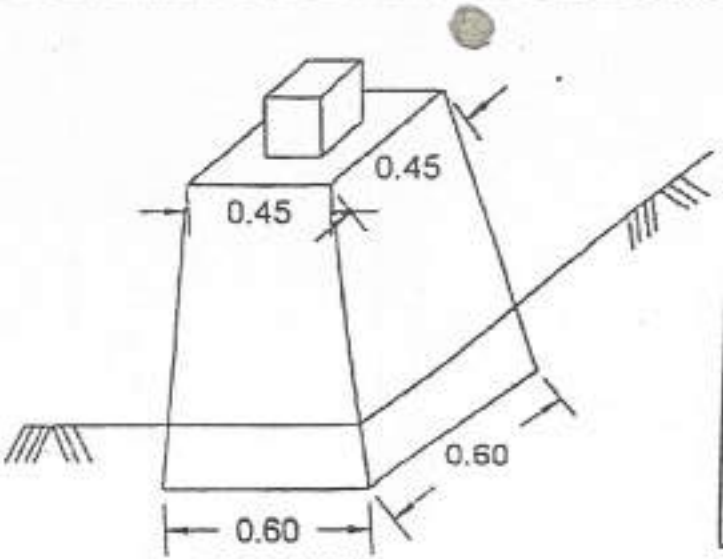

ISOMETRIC ELEVATION

TOP AREA A 1= 0.45X0.45 =0.20SQM	BOTTOM AREA A2 = 0.60X 0.60 =0.36SQM
TOTAL HEIGHT = 1.05M BELOWGL = 0.3M ABOVE GL =0.75 M	VOLUME = H/3(A1+A2+SQRT (A1*A2) =1.30/3*(0.203+0.36 +SQRT(0.203*0.36) = 0.290 CUM VOLUME OF PEDESTAL=0.23*0.23*0.23 =0.012 CUM TOTAL VOLUME = 0.302 CUM

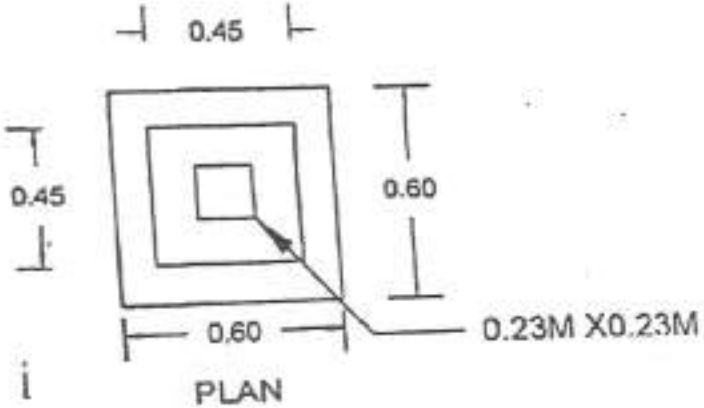

PLAN

TYPE DRAWING FOR BOUNDARY PILLER (CLASS II)
THE OFFICE OF FOREST ENGINEER NAGPUR

RANGE FOREST OFFICER
BADCHA (Protection)

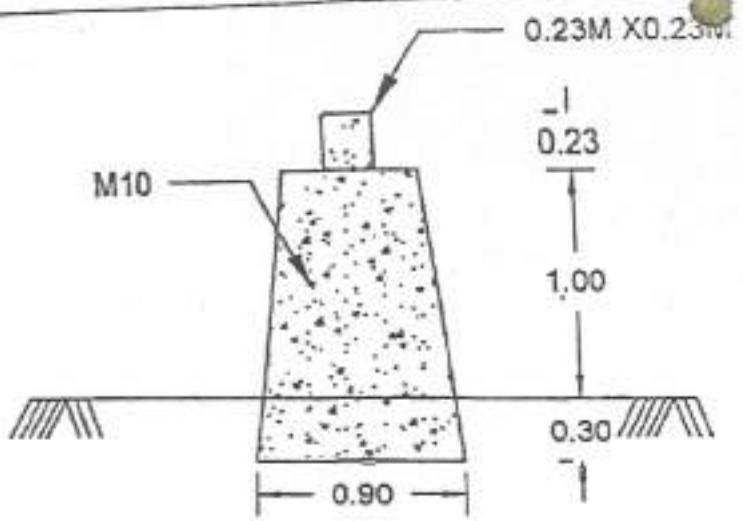

SECTONAL ELEVATION

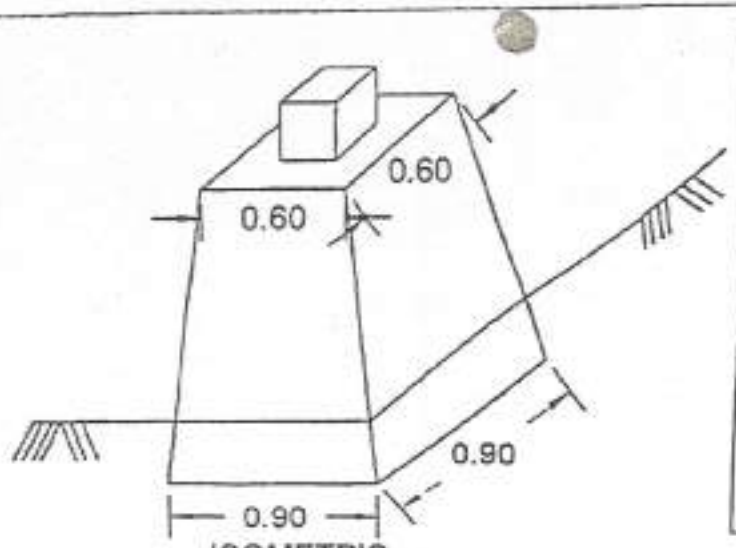

ISOMETRIC ELEVATION

TOP AREA A 1= 0.60X0.60 =0.36 SQM	BOTTOM AREA A2 = 0.90X 0.90 =0.81SQM
TOTAL HEIGHT = 1.30M BELOWGL = 0.3M ABOVE GL =1.00M	VOLUME = H/3(A1+A2+SQRT (A1*A2) =1.30/3*(0.36+0.81+ SQRT(0.36*0.81) = 0.741 CUM VOLUME OF PEDESTAL=0.23*0. 23*0.23 =0.012 CUM TOTAL VOLUME = 0.753 CUM

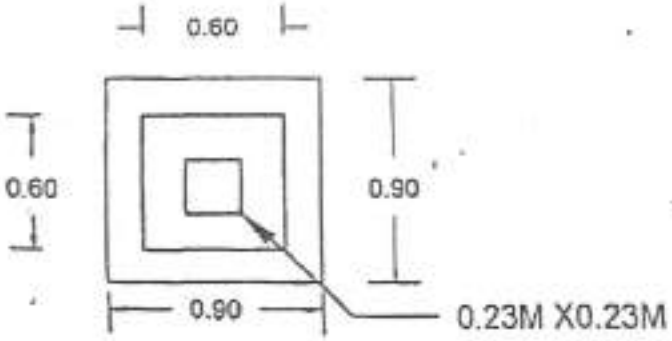

PLAN

TYPE DRAWING FOR BOUNDARY PILLER (CLASS I)		
THE OFFICE OF FOREST ENGINEER NAGPUR		

RANGE FOREST OFFICER
PADCHA (Protection)

महाराष्ट्र वन विभाग

GOVERNMENT OF MAHARASHTRA

FOREST DEPARTMENT

ALIBAG

DETAILED ESTIMATE AND PLAN

NAME OF WORK :-Construction of Concrete Boundary Pillars Class I & Class II In Village Eksal, Kusapur and Chinchavali S.N. 78, 7&8, G.No. 51&52 In Beat In Round Dighashi In Range Padgha, Forest Division Thane (Area 6.706+0.945+5.768 = 13.419 ha,)

ESTIMATED COST: ***Rs 997408***

SSR 2022-23

FACE SHEET

Division [illegible]

Section Finance

Fund [illegible]

Department [illegible]

Agency [illegible]

Activity [illegible]

Expenditure Account [illegible]

Finance Officer [illegible]

NAME OF WORK :-Construction of Concrete Boundary Pillars Class I & Class II In Village Faizal Kangpora and Chinchawali S.N. 78, 788 (Ex.No. 513&52 In Road In Rental Diphasin In Range Pulwama, Forest Division Thana (Area 6.790+0.915=5.788 = 13.419 ha.)

997,408.00

[illegible] [illegible]

[illegible] [illegible]

[illegible]

[illegible] [illegible]

[illegible]

[illegible]

[illegible]

Range Forest Officer
Pulwama

GENERAL REPORT

NAME OF WORK [illegible]

[illegible]	[illegible]
[illegible]	[illegible]
[illegible]	[illegible]
[illegible]	[illegible]
[illegible]	[illegible]
[illegible]	[illegible]
[illegible]	[illegible]
[illegible]	[illegible]
[illegible]	[illegible]
[illegible]	[illegible]
[illegible]	[illegible]
[illegible]	[illegible]
[illegible]	[illegible]

[illegible]

RECAPUTILATION SHEET

NAME OF WORK :-Construction of Concrete Boundary Pillars Class I & Class II In Village Eksal, Kusapur and Chinchavali S.N. 78, 7&8, G No. 51&52 In Beat In Round Dighashi In Range Padgha. Forest Division Thane (Area 6.706 + 0.945 + 5.768 = 13.419 ha.)

Cost of Proper Civil Work Portion	Rs.	814,922.00
Add 18 % for G.S.T.	Rs.	146,685.96
Insurance 0.50%	Rs.	4,074.61
Add Royalty Charges	Rs.	6,588.00
Add Quality Control Charges	Rs.	690.00
Add 3% Contingencies on	Rs.	24,447.66
Total	Rs.	997,408.23

Total Amount Rs.	997,408

Say Rs. 997400/-

RANGE FOREST OFFICER
PADGHA (Protection)

Range Forest Officer
Padgha

Technically Sanctioned for Rs. 997400/-
(Rs- Nine Lakh Ninety Seven thousand four hundred) only
under this office No. DFE/TS/1162, dt. 03/10/2025

Dy Forest Engineer
Thane Circle, Thane

Administration Sanction for Rs:- 9,97,400/- Rs:- Nine lakh ninety seven thousand four hundred only/- under this office
No: 24 Dt:- 06/10/2025

सहा. वनसंरक्षक
भिवंडी (मुख्यालय - ठाणे)

Scanned with CamScanner

NAME OF WORK :-Construction of Concrete Boundary Pillars Class I & Class II In Village Eksal, Kusapur and Chinchavali S.N. 78, 78/8, G.No. 51/8/12 In Beat In Round Dighoshi In Range Padghe, Forest Division Thane (Area 6.706+0.945+5.768 = 13.419 ha.)

RA 1st and Final Bill

Quantity	Item No.	Description	Rate	Unit	Amount
1	2	3	4	5	6
195.24	1	Removing grass, gazve grass and shepering off out of building premises restoring making clean the ground by shovel and phowra etc. complete.	6.45	Square Metre	1,259.10
29.12	2	Excavation for foundation in earth soil of all types, sand, gravel and soft murum, including removing the excavated material up to a distance of 50 m. beyond the building area and stacking and spreading as directed dressing, preparing the bed for the foundation and necessary back filling, ramming, watering including shoring and strutting etc. complete (Lift upto 1.00 m.) By Manual Means	257.90	Cubic Metre	7,511.05
54.68	3	Providing cast in situ ready mix M10 grade cement concrete for load walls of CD work, retaining walls etc. including necessary form work, compaction, finishing and curing etc. complete, with reversible drum type mixer concrete batch mix plant (pan mixer) with SC M10 with fine aggregates of required specifications (Natural sand / VSI sand finely washed etc.) cement 4.05 bags (min)	10012.75	Cubic Meter	548,598.[illegible]
270.40	4	Providing internal cement plaster 6 mm thick in a single coat in cement mortar 1:4 without neat finish to concrete surface in all positions including scaffolding and curing etc. complete.	223.70	Square Metre	60,488.[illegible]

Quantity	*Item No.*	*Description*	*Rate*	*Unit*	*Amount*
28.56	6	*Providing and applying two coats of flat oil paint of approved colour and shade to internal / external plastered surfaces including scaffolding if necessary, cleaning and preparing the surface (excluding primer coat) etc. complete.*	109.00	Square Metre	3,113.04
3456.00	7	*Painting letters upto 20 cm height complete brushes, coir brushers, dusting, cleaning, including cost of paint etc. complete.*	31.30	Number	108,172.80
269.52	8	*Providing and applying two coats of exterior weather shield paint of approved manufacture and of approved colour to the plastered surfaces including cleaning ,preparing the plaster surface ,applying primer coat ,scaffolding if necessary, and watering the surface for two days etc complete.* *NOTE: For Item Number 15 to 18 prior approval of Superintending Engineer will be necessary*	318.30	Square Metre	85,788.22
				Total Amount Rs.	**814,922.00**

Range Forest Officer
Padgha

NAME OF WORK :-Construction of Concrete Boundary Pillars Class I & Class II In Village Eksal, Kusapur and Chinchavali S.N. 78, 7&8, G.No. 51&52 In Beat In Round Dighashi In Range Padgha, Forest Division Thane (Area 6.706+0.945+5.768 = 13.419 ha.)

Mesurement Sheet

ITEM OF WORK	*NO*	*L*	*B*	*D/H*	*QTY.*	*Unit*
ITEM NO.1		*21.34*				
Removing grass, gazer grass and disposing off out of building premises including making clean the ground by shavel and pharavas etc. complete.						
As directed by Engineer in						
class I Pillar						
474 S.N/Co No.	49	1	1.50	1.50	110.25	Sq.M
Total pillars	49					
Class II Pillar						
474 S.N/Co No.	59	1	1.20	1.20	84.96	Sq.M
Total pillars	59					
Square Metre				*Net Qty.*	*195.21*	*Sq.M*
ITEM NO.2		*21.01*				
Excavation for foundation in earth, soil of all types, sand, gravel and soft murum, including removing the excavated material up to a distance of 50 m. beyond the building area and stacking and spreading as directed, dewatering, preparing the bed for the foundation and necessary back						
Bil. 4.1 Page Number 259						
class I Pillar						
	49	1.10	1.10	0.30	17.79	Cum
Class II Pillar						
	59	0.80	0.80	0.30	11.33	Cum
				Total	*29.12*	Cum
Cubic Metre				*Net Qty.*	*29.12*	*Cum*
ITEM NO.3		*11.28*				
Providing cast in situ / ready mix M10 grade cement concrete for head walls of CD work / retaining walls etc. including necessary form work, compaction, finishing and curing etc. complete. (with reversible drum type mixer/ concrete batch mix plant (pan mixer) with SCADA with fine aggregates of required specifications (Natural sand / VSI sand finely washed etc.), cement 4.05						
CD 8 Page 163						
class I Pillar						
volumn of pillar						
H/3 (A1+A2+ (A1*A2			1.30/3 (0.36+0.81+	(0.36*0.81	0.741	
A1 0.60X0.60= 0.36 SQ.MT. A2						
0.90X0.90=0.81 SQ.MT H 1.30						
	49	0.741			36.31	Cu.M
	49	0.23	0.23	0.23	0.60	Cu.M

ITEM OF WORK	NO	L	B	D/H	QTY.	Unit

class II Pillar
volumn of pillar
H/3 (A1+A2+ √A1*A2 = 1.05/3 (0.2+0.36+ √0.2*0.36)
A1 0.45X0.45 =0.20 SQ MT, A2 =0.289
0.60X0.60=0.36 SQ.MTH 1.05

	59	0.289		17.05	Cu M
	59	0.23	0.23	0.12	Cu M
Cubic Meter			*Net Qty.*	*34.68*	*Cum*

ITEM NO.4 *32.01*

Providing internal cement plaster 6 mm thick in a single coat in cement mortar 1:4 without worn finish to
concrete surface in all positions including scaffolding and curing etc. complete.

Bd.L.1 Page
Number 367

class I Pillar					
4*((0.9+0.6)/2)*1.3=3.9	49	4	0.75	1.00	147.00	Sq M
Top Area	49	1	0.60	0.60	17.64	Sq M
class II Pillar					
4*((0.6+0.45)/2)*1.05=3.38	59	4	0.53	0.75	93.81	Sq M
Top Area	59	1	0.45	0.45	11.95	Sq M
Square Metre			*Net Qty.*	*270.40*	*Sqm*

ITEM NO.5 *15.12*

Providing and applying two coats of flat oil paint of approved colour and shade to internal / external plastered surfaces including scaffolding if necessary, cleaning and preparing the surface (excluding primer coat)
etc. complete.

Bd.O.7 Page Number 406

class I Pillar					
Top Stone Side	49	4	0.23	0.23	10.37	Sq M
Top Stone Top	49	1	0.23	0.23	2.59	Sq M
class II Pillar					
Top Stone Side	59	4	0.23	0.23	12.48	Sq M
Top Stone Top	59	1	0.23	0.23	3.12	Sq M
Square Metre			*Net Qty.*	*28.56*	*Sq.M*

ITEM NO.6 *6.05*

Painting letters upto 20 cm height complete brushes, coir brushers, dusting, cleaning, including cost of paint
etc. complete.

MORTH 801

class I Pillar	49	8	4	1568.00	Nos
class II Pillar	59	8	4	1888.00	Nos

ITEM OF WORK	NO	L	B	D/H	QTY.	Unit
Number				Net Qty.	3456.00	Nos

ITEM NO.7 *35.26*

Providing and applying two coats of exterior weather shield paint of approved manufacture and of approved colour to the plastered surfaces including cleaning ,preparing the plaster surface ,applying primer coat

,scaffolding if necessary, and watering the surface for two days etc complete.

NOTE: For

Item Number 15 to 18 prior approval of Superintending Engineer will be necessary

As directed by Engineer in charge.

= 4*((0.9+0.6)/2)*1.3=3.9	49	4	0.75	1.00	147.00	Sq.M
Top Area	49	1	0.60	0.60	17.64	Sq.M
class II Pillar						
= 4*((0.6+0.45)/2)*1.05=3.38	59	4	0.53	0.75	92.93	Sq.M
Top Area	59	1	0.45	0.45	11.95	Sq.M
Square Metre				***Net Qty.***	***269.520***	***Sq.M***

Range Forest Officer
Padgha

NAME OF WORK :-Construction of Concrete Boundary Pillars Class I & Class II In Village Eksal, Kusapur and Chinchavali S.N. 78, 7&8, G.No. 51&52 In Beat In Round Dighashi In Range Padgha, Forest Division Thane (Area 6.706+0.945+5.768 = 13.419 ha,)

Rate Analysis -As per SSR 2022-23

SR.NO	SSR ITEM NO	Description of the item	Unit	Rate	Deduct 21% labour cess and over head charges	Deduct For SCADA For Concrete Items	Sub Total	Add 10% for Tribal Area	ADD CARTING OF MATERIAL AS PER LATEST RATE							Total	Add labour cess and overhead chargespreviously deducted	Final Rate Adopted
									Buld.			Rd			Trasprtation charges			
									Cement	20.00	17.41							
									Sand	20.00	488.73							
									Metal	20.00	488.73							
									Bricks	10.00	0.76							
									Stone	20.00	597.92							
									Murum	20.00	468.57							
									Steel	50.00	645.55							
									Tiles	50.00	64.55							
					21.00%	126		10.00%	Sand	Amt	Concr	Amt.	Metal	Amt				
1	21.34	Removing grass, gazer grass and disposing off	Square Metre	6	1.26	0.00	4.7	0.47	0	0	0	0	0	0	0.00	0.00	1.26	6.45
2	21.01	Excavation for foundation in earth, soil of all types, sand, gravel and soft	Cubic Metre	239	50.19	0.00	188.81	18.88	0	0	0	0	0	0	0.00	0.00	50.19	257.90
3	11.28	Providing cast in situ / ready mix M10 grade cement concrete for head	Cubic Meter	8717	1830.57	126.00	6760.43	676.04	0.47	229.7	4.4	76.6	0.94	459.41	765.71	765.71	1830.57	10032.75
4	32.01	Providing internal cement plaster 6 mm thick in a	Square Metre	203	42.63	0.00	160.37	16.04	0.0976	3.714	0.054	0.94	0	0	4.65	4.65	42.63	223.70
6	35.12	Providing and applying two coats of flat oil paint	Square Metre	101	21.21	0.00	79.79	7.98	0	0	0	0	0	0	0.00	0.00	21.21	109.00
7	6.05	Painting letters upto 20 cm height complete brushes, coir brushers, dusting,	Number	29	6.09	0.00	22.91	2.29	0	0	0	0	0	0	0.00	0.00	6.09	31.30
8	35.26	Providing and applying two coats of exterior weather shield paint of	Square Metre	295	61.95	0.00	233.05	23.31	0	0	0	0	0	0	0.00	0.00	61.95	318.30

Range Forest Officer
Padgha

NAME OF WORK :-Construction of Concrete Boundary Pillars Class I & Class II In Village Eksal, Kusapur and Chinchavali S.N. 78, 7&8, G.No. 51&52 In Beat In Round Dighashi In Range Padgha, Forest Division Thane (Area 6.706+0.945+5.768 = 13.419 ha.)						
Lead Charges State SSR 2022-23						
Sr. No	**Materials**	**Location**	**Lead in Kms**	**Lead Charges Rs.**	**Unit**	**Total Lead Charges Rs.**
1	Murrum, Building Rubish, Earth,		20	468.37	Cu.M	468.37
2	Excavated Rock soling stone		20	597.92	Cu.M	597.92
3	Sand,		20	488.73	Cu.M	488.73
4	Stone below 40 mm,		20	488.73	Cu.M	488.73
5	Stone aggregate 40mm above		20	468.37	Cu.M	468.37
6	Cement, Lime		20	348.11	M.T	348.11
	Cement,				Per Bag	17.41

Range Forest Officer
Padgha

Royalty Statement

NAME OF WORK :-Construction of Concrete Boundary Pillars Class I & Class II In Village Eksal, Kusapur and Chinchavali S.N. 78, 7&8, G.No. 51&52 In Beat In Round Dighashi In Range Padgha, Forest Division Thane (Area 6.706+0.945+5.768 = 13.419 ha,)

Sr.No	SSR Item No	Description of the Item	Unit	Total Qty.of Item	Murum		Sand		Rubble	
					Coefi.	Qty	Coefi.	Qty	Coefi.	Qty
1	21.34	Removing grass, gazer grass and disposing off out of building premises including making clean the	Square Metre	195.21	0.00	0.00	0.000	0.00	0.00	0.60
2	21.01	Excavation for foundation in earth, soil of all types, sand, gravel and soft murum, including removing the	Cubic Metre	29.12	0.00	0.00	0.000	0.00	0.00	0.60
3	11.28	Providing cast in situ / ready mix M10 grade cement concrete for head walls of CD work / retaining walls etc.	Cubic Meter	54.68	0.00	0.00	0.470	25.70	0.00	0.60
4	32.01	Providing internal cement plaster 6 mm thick in a single coat in cement mortar 1:4 without neeru finish to	Square Metre	270.40	0.00	0.00	0.008	2.06	0.00	0.60
6	35.12	Providing and applying two coats of flat oil paint of approved colour and shade to internal / external	Square Metre	28.56	0.00	0.00	0.000	0.00	0.00	0.60
7	6.05	Painting letters upto 20 cm height complete brushes, coir brushers, dusting, cleaning, including cost of paint	Number	3456.00	0.00	0.00	0.000	0.00	0.00	0.60
8	35.26	Providing and applying two coats of exterior weather shield paint of approved manufacture and of approved	Square Metre	269.52	0.00	0.00	0.000	0.00	0.00	0.60
				Total Qty.		0.00		27.75		0.00
				Royalty Charges per Cum		216.18		237.37		216.18
				Deduct Royalty Amount Rs.		0.00		6588.12		0.00
				Total Amount Rs.	6588.00					

Range Forest Officer
Padgha

NAME OF WORK :-Construction of Concrete Boundary Pillars Class I & Class II In Village Eksal, Kusapur and Chinchavali S.N. 78, 7&8, G.No. 51&52 In Beat In Round Dighashi In Range Padgha, Forest Division Thane (Area 6.706+0.945+5.768 = 13.419 ha.)

Sub Estimate - Material Testing

Test Report

Sr. No.	Description of material	As per V.Q.C. Norms		No.of test required	Rate	Amount	Remark
		Type of test	Frequency of test				
1	2	4	5	6	7	8	9
1	Cement concret M-10	Compression Strength Of CC Cube (set of 3 cubes)		1	690	690.00	
				Total Amount Rs.		690.00	

Range Forest Officer
Padgha

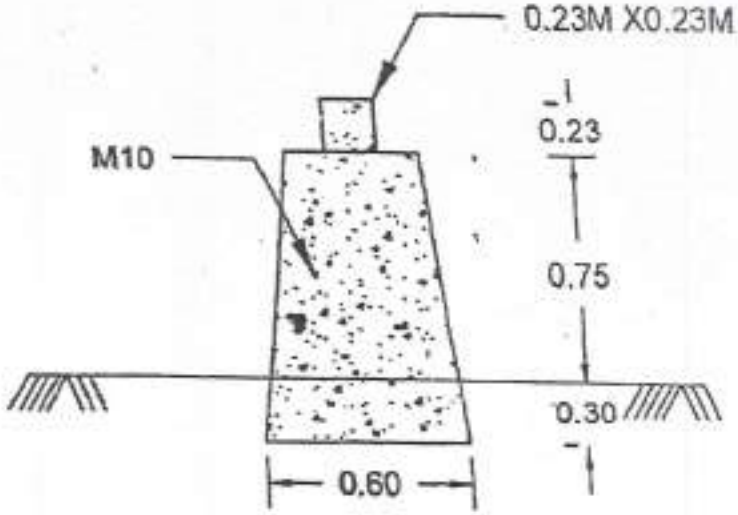

SECTONAL ELEVATION

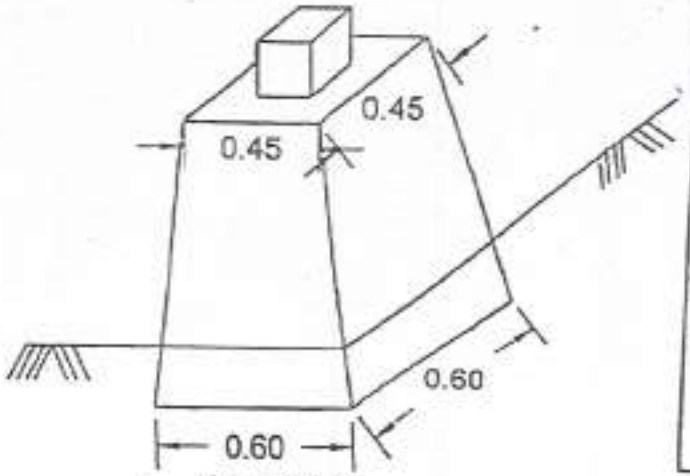

ISOMETRIC ELEVATION

TOP AREA A 1= 0.45X0.45 =0.20SQM	BOTTOM AREA A2 = 0.60X 0.60 =0.36SQM
TOTAL HEIGHT = 1.05M BELOWGL = 0.3M ABOVE GL =0.75 M	VOLUME = H/3(A1+A2+SQRT (A1*A2) =1.30/3*(0.203+0.36 +SQRT(0.203*0.36) = 0.290 CUM VOLUME OF PEDESTAL=0.23*0.23*0.23 =0.012 CUM TOTAL VOLUME = 0.302 CUM

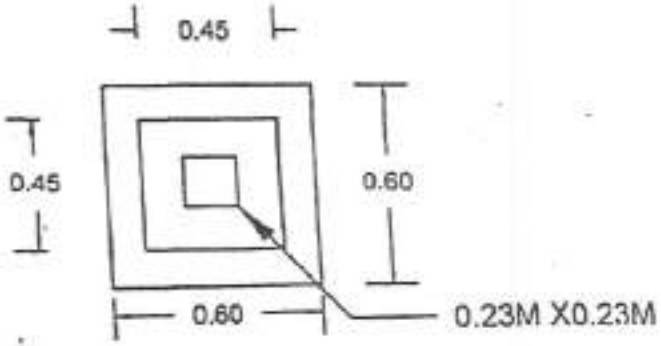

PLAN

RANGE FOREST OFFICER
PADGHA (Protection)

TYPE DRAWING FOR BOUNDARY PILLER (CLASS II)		
THE OFFICE OF FOREST ENGINEER NAGPUR		

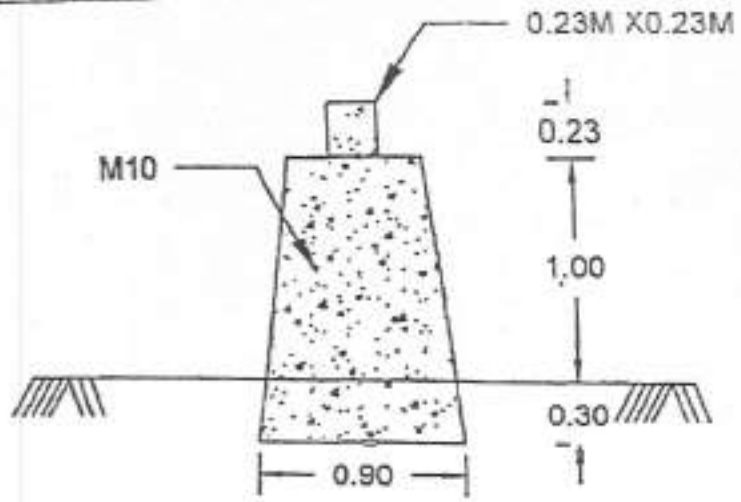

SECTONAL ELEVATION

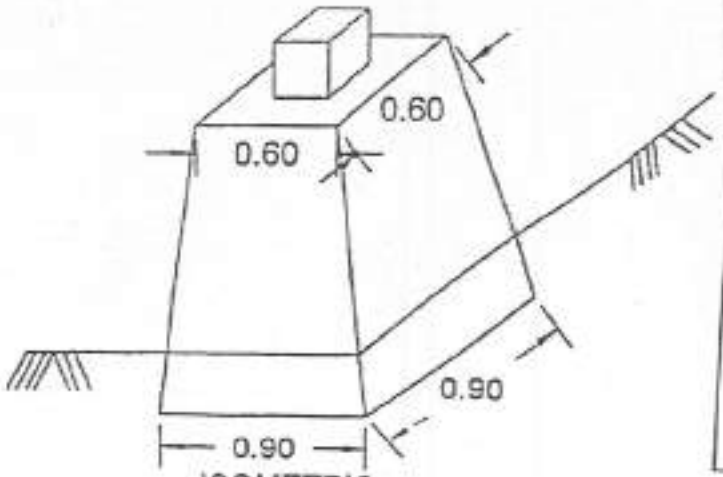

ISOMETRIC ELEVATION

TOP AREA A 1= 0.60X0.60 =0.36 SQM	BOTTOM AREA A2 = 0.90X 0.90 =0.81SQM
TOTAL HEIGHT = 1.30M BELOWGL = 0.3M ABOVE GL =1.00M	VOLUME = H/3(A1+A2+SQRT (A1*A2) =1.30/3*(0.36+0.81+ SQRT(0.36*0.81) = 0.741 CUM VOLUME OF PEDESTAL=0.23*0.23*0.23 =0.012 CUM TOTAL VOLUME = 0.753 CUM

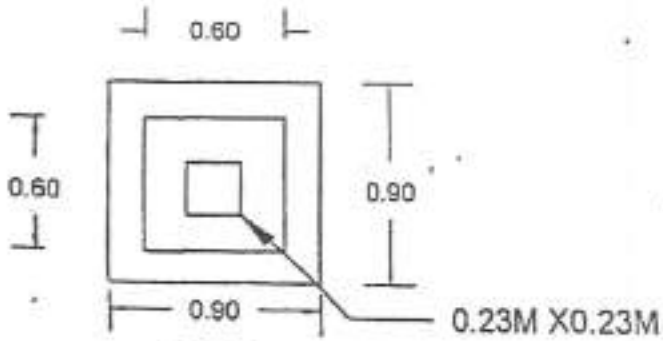

PLAN

RANGE FOREST OFFICER
PADGHA (Protection)

TYPE DRAWING FOR BOUNDARY PILLER (CLASS I)		
THE OFFICE OF FOREST ENGINEER NAGPUR		

(Revised)

दुरध्वनी क्र. 022-25421373
ईमेल- acfbhiwandi@gmail.com

महाराष्ट्र शासन
वन विभाग
सहा. वनसंरक्षक भिवंडी, मुख्यालय ठाणे यांचे कार्यालय
मॅरेथॉन सर्वेल, लाल बहादूर शास्त्री मार्ग, नौपाडा, ठाणे-400 602

पत्र जा.क्र. अ/सवसं/भिवंडी/ 353 /सन 2025-26 दिनांक - 14 /10 / 2025

प्रति,

उप वनसंरक्षक,
ठाणे वनविभाग, ठाणे

उपवनसंरक्षक ठाणे वनविभाग, ठाणे यांचे कार्यालयीन
दप्तरी नाव ..... ठाणे
आवक क्रमांक 8038
15 OCT 2025
कार्यालयीन अधिक्षक
उपवनसंरक्षक ठाणे वनविभाग, ठाणे

विषय : Diversion of १२.०२२५ Ha Forest Land in favour of EHV project Division Kalyan for Construction and laying of २२० KV LILO M/C Transmission line on २२० KV Padghe Wada & Kolshet Wada Tr.line for ४०० KV Kudus Sub Station Passing Throgh Village Eksal, Chichavali, Kunde,& Dighashi Taluka Bhiwandi District Thane in the State of Maharashtra.

संदर्भ : वनक्षेत्रपाल पडघा यांचेकडील पत्र जा.क्र. ता.मा/ 454/ सन 2025-26 दि.03/10/025

उपरोक्त विषयांकित प्रकरणी पडघा वनक्षेत्रातील मौजे वाहुली संरक्षित वन स.नं.52 येथे औषधी रोपवन कामे पुर्व पावसाळी कामे ते 10 व्या वर्षाचे रोपवन कामांचे 1 ते 11 अंदाजपत्रके तांत्रिक मंजूरीसह प्रशासकीय मंजूरी करीता सादर केली आहेत. तरी सदर अंदाजपत्रके तांत्रिक व प्रशासकीय मंजूरी सह सोबत जोडून पुढील कार्यवाहीकरीता सविनय सादर करण्यात येत आहे.

अ.क्रं	कामाचे नाव	कामाचे ठिकाण	तांत्रिक मान्यतेची रक्कम	तांत्रिक मान्यता क्रं	प्रशासकीय मान्यता क्रं.	शेरा
१	औषधी रोपवन करणे क्षेत्र 1.00 हे पुर्व पावसाळी कामे	मौजे वाहुली संरक्षित वन स.नं.52	३२०६१३	Rfo padgha FCA/TS/No.८४/ Dt.१६.०९.२०२५	Acf Bhiwandi A.S.no.७६/ Dt.१४/१०/२०२५	
२	औषधी रोपवन करणे क्षेत्र 1.00 हे .प्रथम वर्ष कामे	मौजे वाहुली संरक्षित वन स.नं.52	१८८९६०३	Acf Bhiwandi T.S.no.१७/Dt.१४/ १०/२०२५	-	
३	औषधी रोपवन करणे क्षेत्र 1.00 हे .व्दितीय वर्ष कामे	मौजे वाहुली संरक्षित वन स.नं.52	४३३६२९	Rfo padgha FCA/TS/No.८५/ Dt.१६.०९.२०२५	Acf Bhiwandi A.S.no.७७/ Dt.१४/१०/२०२५	
४	औषधी रोपवन करणे क्षेत्र 1.00 हे .तृतीय वर्ष कामे	मौजे वाहुली संरक्षित वन स.नं.52	१४१६४८	Rfo padgha FCA/TS/No.८६/ Dt.१६.०९.२०२५	Acf Bhiwandi A.S.no.७८/ Dt.१४/१०/२०२५	
५	औषधी रोपवन करणे क्षेत्र 1.00 हे .चतुर्थ वर्ष कामे	मौजे वाहुली संरक्षित वन स.नं.52	२२३३९	Rfo padgha FCA/TS/No.८७/ Dt.१६.०९.२०२५	Acf Bhiwandi A.S.no.७९/ Dt.१४/१०/२०२५	
६	औषधी रोपवन करणे क्षेत्र 1.00 हे .पंचम वर्ष कामे	मौजे वाहुली संरक्षित वन स.नं.52	२२३३९	Rfo padgha FCA/TS/No.८८/ Dt.१६.०९.२०२५	Acf Bhiwandi A.S.no.८०/ Dt.१४/१०/२०२५	
७	औषधी रोपवन करणे क्षेत्र 1.00 हे .सहावे वर्ष कामे	मौजे वाहुली संरक्षित वन स.नं.52	२२३३९	Rfo padgha FCA/TS/No.८९/ Dt.१६.०९.२०२५	Acf Bhiwandi A.S.no.८१/ Dt.१४/१०/२०२५	
८	औषधी रोपवन करणे क्षेत्र 1.00 हे .सातवे वर्ष कामे	मौजे वाहुली संरक्षित वन स.नं.52	२२३३९	Rfo padgha FCA/TS/No.९०/ Dt.१६.०९.२०२५	Acf Bhiwandi A.S.no.८२/ Dt.१४/१०/२०२५	
९	औषधी रोपवन करणे क्षेत्र 1.00 हे .आठवे वर्ष कामे	मौजे वाहुली संरक्षित वन स.नं.52	२२३३९	Rfo padgha FCA/TS/No.९१/ Dt.१६.०९.२०२५	Acf Bhiwandi A.S.no.८३/ Dt.१४/१०/२०२५	
१०	औषधी रोपवन करणे क्षेत्र	मौजे वाहुली संरक्षित	२२३३९	Rfo padgha	Acf Bhiwandi	

	1.00 हे .नववे वर्ष कामे	वन स.नं.52		FCA/TS/No.९२/ Dt.१६.०९.२०२५	A.S.no.८४/ Dt.१४/१०/२०२५	
११	औषधी रोपवन करणे क्षेत्र 1.00 हे .दहावे वर्ष कामे	मौजे वाहुली संरक्षित वन स.नं.52	२२३३१	Rfo padgha FCA/TS/No.९३/ Dt.१६.०९.२०२५	Acf Bhiwandi A.S.no.८५/ Dt.१४/१०/२०२५	
		एकूण	२९४१८६६			

सहपत्र- वरीलप्रमाणे

(अमोल चिरमे)
सहा. वनसंरक्षक भिवंडी
मुख्यालय ठाणे

वनपरिक्षेत्र अधिकारी पडघा यांचेकार्यालय

'निळाई हॉस्पिटलचेसमोर, पडघा-भिवंडी रोड दूरध्वनी क्रमांक - 02522-202045

विषय:-Diversion of 12.0225 Ha Forest Land in favour of EHV project Division Kalyan For Construction and laying of 220 KV LILO M/C Transmission line on 220 KV Padghe Wada & Kolshet Wada Tr.line for 400 KV Kudus Sub Station Passing Through Village Ukal Ghatavali,Kunde& Dighashi Taluka Bhiwandi District Thane in the State of Maharashtra.

जा.क्र. अ/ दोजना/ ४५४/ सन २०२५-२६
पडघा ४२१ १०५ दिनांक.०३.१०.२०२५

संदर्भ. वनसंरक्षक. भिवंडी
(मुख्यालय - ठाणे) यांचे कार्यालय
जा.क्र.
दिनांक - 14/10/2025.
शाखा -

प्रति.

मा. उपवनसंरक्षक
ठाणे वनविभाग ठाणे

(मा. सहायक वनसंरक्षक शिपरे) स्थित ठाणे यांचे मार्फत सविनय सादर ;

संदर्भ १ केंद्रशासनाकडीलपत्रक्रFC-II/MU-२०१२०२३-NC-१४६१०दि०२.०८.२०२५

२ आपलेकडील पत्र क्रमांक क्र.४-२५/कांचाणी/एफसी/२७०२ दिनांक२१.०९.२०२५

उपरोक्त संदर्भीय विषयान्वये वनपरिक्षेत्र पडघामध्ये(वनसंरक्षण एवम संवर्धन अधिनियम अंतर्गत) Diversion of १२.०२२५ Ha Forest Land in favour of EHV project Division Kalyan for Construction and laying of २२० KV LILO M/C Transmission line on २२० KV Padghe Wada & Kolshet Wada Tr.line for ४०० KV Kudus Sub Station Passing Through Village Ukal, Ghatavali, Kunde, & Dighashi Taluka Bhiwandi District Thane वन जमिन मागणी प्रस्तावास केंद्रशासनाकडुन उपरोक्त संदर्भ पत्र क्र.१अन्वये १ते२४ अटी व शर्तीच्या अधिन राहुन तत्वता मंजुरी मिळाली आहे उपरोक्त संदर्भ क्र.२ अन्वये कळविल्यानुसार शासनाकडील तत्वता मंजुरी पत्रातील अट क्र.६ नुसार औषधी वनस्पती लागवडीकरीता औषधी रोपवन पूर्व पावसाळी कामे ते १० वा वर्षाचे रोपवन कामांचे १ते१२ अंदाजपत्रके या कार्यालयाकडुन तयार करण्यात येवून प्रथम वर्ष कामाचे अंदाजपत्रक वगळता इतर सर्वअंदाजपत्रकाना तांत्रिक मान्यता प्रदान करण्यातयेवून सदरचे अंदाजपत्रके पुढील कार्यवाहीकामी प्रविनय सादर करण्यातयेतआहे

अ.क्र	कामाचे नाव	कामाचे विभाग	तांत्रिक मान्यतेची रक्कम	तांत्रिक मान्यतेचा तपशिल	शेरा
1	औषधी रोपवन करणे क्षेत्र 1.00 हे पूर्व पावसाळी कामे	पडघे वाडा संरक्षित वन क्षे.52	3206131/-	RFO Padgha FCA/TS/NOW/84 Dt.16.09.2025	तांत्रिक मान्यतेसाठी
2	औषधी रोपवन करणे क्षेत्र 1.00 हे पूर्व पावसाळी कामे	कोळे वाडा संरक्षित वन क्षे.52	1989603/-	-	
3	औषधी रोपवन करणे क्षेत्र 1.00 हे पूर्व पावसाळी कामे	कोळे वाडा संरक्षित वन क्षे.52	4336629/-	RFO Padgha FCA/TS/NOW/84 Dt.16.09.2025	

4	औषधी रोपवन करणे क्षेत्र 1.00 हे. पूर्ण पाठपुरावा करणे	मौजे बोडुली संरक्षित वन सं.क्र.52	141645/-	RFO Padgha FCA/TS/No/86/ Dt.16.09.2025
5	औषधी रोपवन करणे क्षेत्र 1.00 हे. पूर्ण पाठपुरावा करणे	मौजे बोडुली संरक्षित वन सं.क्र.52	223397/-	RFO Padgha FCA/TS/No/87/ Dt.16.09.2025
6	औषधी रोपवन करणे क्षेत्र 1.00 हे. पूर्ण पाठपुरावा करणे	मौजे बोडुली संरक्षित वन सं.क्र.52	223397/-	RFO Padgha FCA/TS/No/88/ Dt.16.09.2025
7	औषधी रोपवन करणे क्षेत्र 1.00 हे. पूर्ण पाठपुरावा करणे	मौजे बोडुली संरक्षित वन सं.क्र.52	223397/-	RFO Padgha FCA/TS/No/89/ Dt.16.09.2025
8	औषधी रोपवन करणे क्षेत्र 1.00 हे. पूर्ण पाठपुरावा करणे	मौजे बोडुली संरक्षित वन सं.क्र.52	223397/-	RFO Padgha FCA/TS/No/90/ Dt.16.09.2025
9	औषधी रोपवन करणे क्षेत्र 1.00 हे. पूर्ण पाठपुरावा करणे	मौजे बोडुली संरक्षित वन सं.क्र.52	223397/-	RFO Padgha FCA/TS/No/91/ Dt.16.09.2025
10	औषधी रोपवन करणे क्षेत्र 1.00 हे. पूर्ण पाठपुरावा करणे	मौजे बोडुली संरक्षित वन सं.क्र.52	223397/-	RFO Padgha FCA/TS/No/92/ Dt.16.09.2025
11	औषधी रोपवन करणे क्षेत्र 1.00 हे. पूर्ण पाठपुरावा करणे	मौजे बोडुली संरक्षित वन सं.क्र.52	223397/-	RFO Padgha FCA/TS/No/93/ Dt.16.09.2025
		एकुण -	2941866/-	

सहपत्र : नि.ना. अंदाजपत्रके

(रमेश रसाळ)
वनपरिक्षेत्र अधिकारी
पळशा (से)

Thane Forest Division, Thane

RATE STRUCTURE FOR COMPENSATORY AFFORESTATION ON WORKS IN ZONE II & III HEAVY RAIN FALL AREA (2500 PLANTS/Ha.)

Village - Wahuli , P.F. S.No.52 Beat Wahuli Round Wadapa TALUKA BHIWANDI DIST THANE

DAILY WAGES RATE 514.88 Area :- 1.0000 HECTARE

Sr. No.	Particulars of works	Mandays	Wages	Material supply	Total	Wages	Material supply	Total
	P.P.O + P.Y.O.WORKS							
1	(A) Survey & Demarcation	1.00	514.88	91.00	605.88	514.88	91.00	605.88
	(B) Preparation of treatment map including laying of grids at (100mx50m)	1.00	514.88	91.00	605.88	514.88	91.00	605.88
	(C) Digging of trial pits (0.30x0.30x0.30m) in corner of grid	0.40	205.95	0.00	205.95	205.95	0.00	205.95
	D) Fixing 60cmX0.05 cmX12 cm cement pillar upto 30 cm deep in corner of grid painting with grid no. etc complete (3 pillars, Rs 75/- for each pillars)	0.00	0.00	225.00	225.00	0.00	225.00	225.00
	E) Clearing of bushes and preparation of site (As per requirement)	10.00	5148.80	91.00	5239.80	5148.80	91.00	5239.80
2	Soil and Moisture conservation works including collection of nubbles from areas upto 30 m etc	31.00	15961.28	0.00	15961.28	15961.28	0.00	15961.28
3	Providing and fixing chain link fencing 102 Rmt for Ha (with one Gate+ two wicket gates for one site) (Rs 1494 per Rmt of basic rate + 20% for transportation of avail. lead plus 20% for travel/remote area by tender process) Rs 1494+149+149=1792/- per Rmt (1.60 Rmt height with G.I. Chain link size 50 mm x 50 mm 8 guage thick and Fixed 75 mm above ground level complete as per SSR item No.1744 for 2017-18)	0.00	0.00	182865.60	182865.60	0.00	182865.60	182865.60
4	Alignment of pits at 2mx2m spacement, 2500 pits per Ha (0.25 per 100 pits and M & S @ Rs. 2.24 per 50 pits)	6.50	3346.72	112.00	3458.72	3346.72	112.00	3458.72

३

5	Digging of pits size 0.45 x 0.35 x 0.45 m (2500 pits for ha) 6.60 MD per 100 pits Note:- As per local conditions provision for mechanised digging can be made.	165.00	84955.20	0.00	84955.20	84955.20	0.00	84955.20
6	Construction of 5.00 rmt wide inspection path 1 MD per 100 rmt	1.00	514.88	0.00	514.88	514.88	0.00	514.88
7	Providing and fixing (4 feet x 3 feet) information board each per site	0.00	0.00	5000.00	5000.00	0.00	5000.00	5000.00
8	Part Nursery cost of raising 3000 seedlings per ha (including 20% casualty replacement) in polygons of size 12.50 X 25.00 cm (wages Rs 11.90 and M & S Rs 3.62 per plant	105.14	54134.48	9651.84	63786.32	0.00	0.00	0.00
	TOTAL :-	**321.04**	**165297.08**	**198127.44**	**363424.52**	**111162.59**	**188475.60**	**299638.19**
9	Contingency 3%		4958.91	5943.82	10902.74	3334.88	5654.27	8989.15
10	Labour welfare (Medi &water) 4%		6611.88	7925.10	14536.98	4446.50	7539.02	11985.53
	TOTAL :-		**176867.87**	**211996.36**	**388864.23**	**118943.97**	**201668.89**	**320612.87**
	SAY AS TOTAL :-				**388864**			**320613.00**

वनपरिक्षेत्र अधिकारी
पडघा

तांत्रिक मान्यता क्र. ८४ दि. १६/०८/२५
रक्कम - ३२०६१३/- तीन लाख वीस हजार सहाशे तेरा रु. मात्र

वनपरिक्षेत्र अधिकारी
पडघा

प्रशासकिय मान्यता क्र. ७६ दि. १४/१०/२५
रक्कम - ३२०६१३/- तीन लाख वीस हजार सहाशे तेरा रु. मात्र
मात्र या रक्कमेस प्रशासकीय मंजुरी देण्यात येत आहे.

मा. सहाय्यक वनसंरक्षक
भिवंडी

Thane Forest Division, Thane

RATE STRUCTURE FOR COMPENSATORY AFFORESTATION ON WORKS IN ZONE II & III HEAVY RAIN FALL AREA (2500 PLANTS/Ha.)

Village - Wahuli , P.F. S.No.62 Beat Wahuli Round Wadapa TALUKA BHIWANDI DIST THANE

DAILY WAGES RATE 514.88 Area :- 1.0000 HECTARE

Sr. No.	Particulars of works	Mandays	Wages	Material supply	Total	Wages	Material supply	Total
	First Year Operation							
1	Purchasing of 2500 + 20% Mortality 500 = 3000 Medicinal plants as per Market Rate and Availability	L.S	L.S	L.S	1500000.00	L.S	L.S	1500000.00
2	Refilling of pits by good quality soil including application of single super phosphate (1.66 MD per 100 pits)	41.50	21367.52	1200.00	22567.52	21367.52	1200.00	22567.52
3	Transportation of 3,000 seedlings for nursery to plantation site including loading and unloading (2.14 M.D. per 100 seedlings and M.S. Rs 1.82 per seedlings)	4.20	2162.50	5460.00	7622.50	2162.50	5460.00	7622.50
4	Planting of 2500 seedlings (1.1 M.D. per 100 seedlings)	27.50	14159.20	0.00	14159.20	14159.20	0.00	14159.20
5	3 seedlings (1Rmt Circular) and 2 soil workings (4.00 M.D. per 100 seedlings) fertilizer application Rs 0.82 per seedlings)	87.50	45052.00	2050.00	47102.00	45052.00	2050.00	47102.00
6	Watering the plants Month 4 Nov,Dec 1 time and in Jan To March 2 Times as Per per Plant 5 litre	59.25	30505.64	122400.99	152907.63	30505.64	122400.99	152907.63
7	Casualty Replacement (20% 600 seedling per ha) (2 MD per 100 seedlings)	10.00	5148.80	0.00	5148.80	5148.80	0.00	5148.80
8	Part Nursery cost for casualty replacement in SYO (600 Seedlings Per Ha) (wages Rs. 9.60 and material supply Rs. 3.82 total Rs. 12.60 per seedling)	0.00	0.00	0.00	0.00	0.00	0.00	0.00
9	Watch and ward (10 months - 1 watcher per 1.00 ha). Plantation	30.00	514.88	0.00	15446.40	514.88	0.00	15446.40
10	Fire tracing	2.00	1029.76	0.00	1029.76	1029.76	0.00	1029.76
	TOTAL :-	261.95	119941.30	131110.99	1765983.81	119941.30	131110.99	1765983.81
11	Contingency 3%		3598.24	3933.33	52979.51	3598.24	3933.33	52979.51

12	Labour welfare (Medi &water) 4%		4797.65	5244.44	10042.09	4797.65	5244.44	70639.35
	TOTAL :-		128337.19	140288.76	1829005.41	128337.19	140288.76	1889602.67
	SAY AS TOTAL :-				1829005			1889603.00

वनपरिक्षेत्र अधिकारी
पडघा

तांत्रिक मान्यता क्र. ९७ दि. ९१/१०/२५
रक्कम - १८८९६०३/- अठरा लाख एकोणनव्वद हजार सहाशे तीन रु. मात्र

Gphirame

मा. सहाय्यक वनसंरक्षक
भिवंडी

प्रशासकिय मान्यता क्र. दि.
रक्कम - १८८९६०३/- अठरा लाख एकोणनव्वद हजार सहाशे तीन रु. मात्र
मात्र या रक्कमेस प्रशासकीय मंजुरी देण्यात येत आहे.

मा. सहाय्यक वनसंरक्षक
भिवंडी

Thane Forest Division, Thane

RATE STRUCTURE FOR COMPENSATORY AFFORESTATION ON WORKS IN ZONE II & III HEAVY RAIN FALL AREA (2500 PLANTS/Ha.)

Village - Wahuli , P.F. S.No.52 Beat Wahuli Round Wadapa TALUKA BHIWANDI DIST THANE

DAILY WAGES RATE 514.88 Area :- 1.0000 HECTARE

Sr. No.	Particulars of works	Mandays	Wages	Material supply	Total	Wages	Material supply	Total
	Second Year Operation							
1	Purchasing of 20% Mortailty 500 Medicinal plants as per Market Rate and Availbilty	0.00	0.00	0.00	300000.00	0.00	0.00	300000.00
2	Transportation of 222 seedlings for casualty replacement from Nursery to planting site (including loading and unloading) wages 0.14 MD per 100 Seedlings & MS Rs. 1.82 per seedling	0.00	0.00	914.00	914.00	0.00	914.00	914.00
3	Palnting for Casualty replacement 500 seedlings (2.00 MD per 100 seedlings)	10.00	5148.80	0.00	5148.80	514.88	0.00	514.88
4	Two weeding and 1 soil working, with fertilizer applicationat 2.5 MD per 100 seedlings MS Rs 0.82 per seedling	62.50	32180.00	2050.00	34230.00	514.88	2050.00	2564.88
5	Watering the plants Month in Nov,Dec,Jan and june 1 time and in feb To May 2 Times as Per,per Plant 5 litre	200.00	102976.00	81244.37	184220.37	200.00	81244.37	81444.37
6	Watch and ward (12 months - 1 watcher per 1.00 ha). Plantation	36.50	514.88	0.00	18793.12	514.88	0.00	18793.12
7	Fire tracing	2.00	1029.76	0.00	1029.76	1029.76	0.00	1029.76
	TOTAL :-	**311.00**	**141849.44**	**84208.37**	**544336.05**	**2774.40**	**84208.37**	**405261.01**
8	Contingancy 3%		4255.48	2526.25	16330.08	83.23	2526.25	12157.83
9	Labour welfare (Medi &water) 4%		5673.98	3368.33	9042.31	110.98	3368.33	16210.44
	TOTAL :-		**151778.90**	**90102.96**	**569708.44**	**2968.61**	**90102.96**	**433629.28**
	SAY AS TOTAL :-				**569708**			**433629.00**

वनपरिक्षेत्र अधिकारी
वडपा

तांत्रिक मान्यता क्र. ८५ दि. १६/०८/२५
रक्कम - ४३३६२९/- चार लाख तेहतीस हजार सहाशे एकोणतीस रु. मात्र

वनपरिक्षेत्र अधिकारी
वडपा

प्रशासकिय मान्यता क्र. ७७० दि. १४/१०/२५
रक्कम - ४३३६२९/- चार लाख तेहतीस हजार सहाशे एकोणतीस रु. मात्र
मात्र या रक्कमेस प्रशासकीय मंजुरी देण्यात येत आहे.

मा. सहाय्यक वनसंरक्षक
भिवंडी

Thane Forest Division, Thane

RATE STRUCTURE FOR COMPENSATORY AFFORESTATION ON WORKS IN ZONE II & III HEAVY RAIN FALL AREA (2500 PLANTS/Ha.)

Village - Wahuli , P.F. S.No.52 Beat Wahuli Round Wadapa TALUKA BHIWANDI DIST THANE

DAILY WAGES RATE 514.88 Area :- 1.0000 HECTARE

Sr. No.	Particulars of works	Mandays	Wages	Material supply	Total	Wages	Material supply	Total
	Third Year Operation							
1	1 weeding and 1 soil working, (1.50 MD per 100 seedlings) applying fertilizer @ Rs 0.82 per plant	37.50	19308.00	0.00	19308.00	19308.00	0.00	19308.00
2	Watering the plants Month in Nov,Dec,Jan and june 1 time and in feb To May 2 Times as Per,per Plant 5 litre	100.09	51534.34	40661.56	92195.90	51534.34	40661.56	92195.90
3	Watch and ward (12 months - 1 watcher per 1.00 ha). Plantation	36.50	514.88	0.00	18793.12	0.00	0.00	18793.12
4	counting of survival percentage Grid wise and Species wise and to Note the same on register in May and October	2.00	1029.76	25.00	1054.76	1029.76	25.00	1054.76
5	Fire tracing	2.00	1029.76	0.00	1029.76	1029.76	0.00	1029.76
	TOTAL :-	**178.09**	**73415.74**	**40686.56**	**132381.54**	**72901.86**	**40686.56**	**132381.54**
6	Contingancy 3%		2202.50	1220.60	3971.45	2187.06	1220.60	3971.45
7	Labour welfare (Medi &water) 4%		2938.67	1627.46	4564.13	2916.07	1627.46	5295.26
	TOTAL :-		**78555.91**	**43534.62**	**140917.12**	**78004.99**	**43534.62**	**141648.25**
	SAY AS TOTAL :-				**140917**			**141648.00**

वनपरिक्षेत्र अधिकारी
पडघा

तांत्रिक मान्यता क्र. CE दि. 9/10/24
रक्कम - १४१६४८/- एक लाख एकेचाळीस हजार सहाशे अठ्ठेचाळीस रु. मात्र

वनपरिक्षेत्र अधिकारी
पडघा

प्रशासकिय मान्यता क्र. LOC दि. 98/90/24
रक्कम - १४१६४८/- एक लाख एकेचाळीस हजार सहाशे अठ्ठेचाळीस रु. मात्र
मात्र या रक्कमेस प्रशासकीय मंजुरी देण्यात येत आहे.

मा. सहाय्यक वनसंरक्षक
भिवंडी

Thane Forest Division, Thane

RATE STRUCTURE FOR COMPENSATORY AFFORESTATION ON WORKS IN ZONE II & III HEAVY RAIN FALL AREA (2500 PLANTS/Ha.)

Village - Wahuli , P.F. S.No.52 Beat Wahuli Round Wadapa TALUKA BHIWANDI DIST THANE

DAILY WAGES RATE 514.88 Area :- 1.0000 HECTARE

Sr. No.	Particulars of works	Mandays	Wages	Material supply	Total	Wages	Material supply	Total
	Fourth Year Operation							
1	Watch and ward (12 months - 1 watcher per 1.00 ha). Plantation	36.50	514.88	0.00	18793.12	0.00	0.00	18793.12
3	counting of survival percentage Grid wise and Species wise and to Note the same on register in May and October	2.00	1029.76	25.00	1054.76	1029.76	25.00	1054.76
2	Fire tracing	2.00	1029.76	0.00	1029.76	1029.76	0.00	1029.76
	TOTAL :-	**40.50**	**2574.40**	**25.00**	**20877.64**	**2059.52**	**25.00**	**20877.64**
3	Contingancy 3%		77.23	0.75	626.33	61.79	0.75	626.33
4	Labour welfare (Medi &water) 4%		102.98	1.00	103.98	82.38	1.00	835.11
	TOTAL :-		**2754.61**	**26.75**	**21607.95**	**2203.69**	**26.75**	**22339.07**
	SAY AS TOTAL :-				**21608**			**22339.00**

वनपरिक्षेत्र अधिकारी
वाडा

तांत्रिक मान्यता क्र. 20 दि. 96/06/24
रक्कम - २२३३९/- बावीस हजार तीनशे एकोणचाळीस रु. मात्र

वनपरिक्षेत्र अधिकारी
वाडा

प्रशासकिय मान्यता क्र. 120 दि. 98/90/24
रक्कम - २२३३९/- बावीस हजार तीनशे एकोणचाळीस रु. मात्र
मात्र या रक्कमेस प्रशासकीय मंजुरी देण्यात येत आहे.

सहा. वनसंरक्षक
भिवंडी

Thane Forest Division, Thane

RATE STRUCTURE FOR COMPENSATORY AFFORESTATION ON WORKS IN ZONE II & III HEAVY RAIN FALL AREA (2500 PLANTS/Ha.)

Village - Wahuli , P.F. S.No.52 Beat Wahuli Round Wadapa TALUKA BHIWANDI DIST THANE

DAILY WAGES RATE 514.88 Area :- 1.0000 HECTARE

Sr. No.	Particulars of works	Mandays	Wages	Material supply	Total	Wages	Material supply	Total
	Fifth Year Operation							
1	Watch and ward (12 months - 1 watcher per 1.00 ha). Plantation	36.50	514.88	0.00	18793.12	514.88	0.00	18793.12
2	counting of survival percentage Grid wise and Species wise and to Note the same on register in May and October	2.00	1029.76	25.00	1054.76	1029.76	25.00	1054.76
3	Fire tracing	2.00	1029.76	0.00	1029.76	1029.76	0.00	1029.76
	TOTAL :-	**40.50**	**2574.40**	**25.00**	**20877.64**	**2574.40**	**25.00**	**20877.64**
3	Contingancy 3%		77.23	0.75	626.33	77.23	0.75	626.33
4	Labour welfare (Medi &water) 4%		102.98	1.00	103.98	102.98	1.00	835.11
	TOTAL :-		**2754.61**	**26.75**	**21607.95**	**2754.61**	**26.75**	**22339.07**
	SAY AS TOTAL :-				**21608**			**22339.00**

वनपरिक्षेत्र अधिकारी
वडघा

तांत्रिक मान्यता क्र. ८८ दि. १६/०९/२५
रक्कम - २२३३९/- बावीस हजार तीनशे एकोणचाळीस रु. मात्र

वनपरिक्षेत्र अधिकारी
वडघा

प्रशासकिय मान्यता क्र. ८० दि. १२/१०/२५
रक्कम - २२३३९/- बावीस हजार तीनशे एकोणचाळीस रु. मात्र
मात्र या रक्कमेस प्रशासकीय मंजुरी देण्यात येत आहे.

मा. सहाय्यक वनसंरक्षक
भिवंडी

Thane Forest Division, Thane

RATE STRUCTURE FOR COMPENSATORY AFFORESTATION ON WORKS IN ZONE II & III HEAVY RAIN FALL AREA (2500 PLANTS/Ha.)

Village - Wahuli , P.F. S.No.52 Beat Wahuli Round Wadapa TALUKA BHIWANDI DIST THANE

DAILY WAGES RATE 514.88 Area :- 1.0000 HECTARE

Sr. No.	Particulars of works	Mandays	Wages	Material supply	Total	Wages	Material supply	Total
	Sixth Year Operation							
1	Watch and ward (12 months - 1 watcher per 1.00 ha). Plantation	36.50	514.88	0.00	18793.12	514.88	0.00	18793.12
2	counting of survival percentage Grid wise and Species wise and to Note the same on register in May and October	2.00	1029.76	25.00	1054.76	1029.76	25.00	1054.76
3	Fire tracing	2.00	1029.76	0.00	1029.76	0.00	0.00	1029.76
	TOTAL :-	**40.50**	**2574.40**	**25.00**	**20877.64**	**1544.64**	**25.00**	**20877.64**
3	Contingancy 3%		77.23	0.75	626.33	46.34	0.75	626.33
4	Labour welfare (Medi &water) 4%		102.98	1.00	103.98	61.79	1.00	835.11
	TOTAL :-		**2754.61**	**26.75**	**21607.95**	**1652.76**	**26.75**	**22339.07**
	SAY AS TOTAL :-				**21608**			**22339.00**

वनपरिक्षेत्र अधिकारी
पडघा

तांत्रिक मान्यता क्र. CE दि. 98/10/24
रक्कम - २२३३९/- बावीस हजार तीनशे एकोणचाळीस रु. मात्र

वनपरिक्षेत्र अधिकारी
पडघा

प्रशासकिय मान्यता क्र. 29 दि. 98/10/24
रक्कम - २२३३९/- बावीस हजार तीनशे एकोणचाळीस रु. मात्र
मात्र या रक्कमेस प्रशासकीय मंजुरी देण्यात येत आहे.

मा. सहाय्यक वनसंरक्षक
भिवंडी

Thane Forest Division, Thane

RATE STRUCTURE FOR COMPENSATORY AFFORESTATION ON WORKS IN ZONE II & III HEAVY RAIN FALL AREA (2500 PLANTS/Ha.)

Village - Wahuli , P.F. S.No.52 Beat Wahuli Round Wadapa TALUKA BHIWANDI DIST THANE

DAILY WAGES RATE 514.88 Area :- 1.0000 HECTARE

Sr. No.	Particulars of works	Mandays	Wages	Material supply	Total	Wages	Material supply	Total
	Seventh Year Operation							
1	Watch and ward (12 months - 1 watcher per 1.00 ha). Plantation	36.50	514.88	0.00	18793.12	514.88	0.00	18793.12
2	counting of survival percentage Grid wise and Species wise and to Note the same on register in May and October	2.00	1029.76	25.00	1054.76	1029.76	25.00	1054.76
3	Fire tracing	2.00	1029.76	0.00	1029.76	1029.76	0.00	1029.76
	TOTAL :-	**40.50**	**2574.40**	**25.00**	**20877.64**	**2574.40**	**25.00**	**20877.64**
3	Contingancy 3%		77.23	0.75	626.33	77.23	0.75	626.33
4	Labour welfare (Medi &water) 4%		102.98	1.00	103.98	102.98	1.00	835.11
	TOTAL :-		**2754.61**	**26.75**	**21607.95**	**2754.61**	**26.75**	**22339.07**
	SAY AS TOTAL :-				**21608**			**22339.00**

वनपरिक्षेत्र अधिकारी
पडघा

तांत्रिक मान्यता क्र. ८० दि. १६/०८/२५
रक्कम - २२३३९/- बावीस हजार तीनशे एकोणचाळीस रु. मात्र

वनपरिक्षेत्र अधिकारी
पडघा

प्रशासकिय मान्यता क्र. ८२ दि. १४/१०/२५
रक्कम - २२३३९/- बावीस हजार तीनशे एकोणचाळीस रु. मात्र
मात्र या रक्कमेस प्रशासकीय मंजुरी देण्यात येत आहे.

मा. सहाय्यक वनसंरक्षक
भिवंडी

Thane Forest Division, Thane

RATE STRUCTURE FOR COMPENSATORY AFFORESTATION ON WORKS IN ZONE II & III HEAVY RAIN FALL AREA (2500 PLANTS/Ha.)

Village - Wahuli , P.F. S.No.52 Beat Wahuli Round Wadapa TALUKA BHIWANDI DIST THANE

DAILY WAGES RATE 514.88 Area :- 1.0000 HECTARE

Sr. No.	Particulars of works	Mandays	Wages	Material supply	Total	Wages	Material supply	Total
	Eight Year Operation							
1	Watch and ward (12 months - 1 watcher per 1.00 ha). Plantation	36.50	514.88	0.00	18793.12	514.88	0.00	18793.12
2	counting of survival percentage Grid wise and Species wise and to Note the same on register in May and October	2.00	1029.76	25.00	1054.76	1029.76	25.00	1054.76
3	Fire tracing	2.00	1029.76	0.00	1029.76	1029.76	0.00	1029.76
	TOTAL :-	**40.50**	**2574.40**	**25.00**	**20877.64**	**2574.40**	**25.00**	**20877.64**
3	Contingancy 3%		77.23	0.75	626.33	77.23	0.75	626.33
4	Labour welfare (Medi &water) 4%		102.98	1.00	103.98	102.98	1.00	835.11
	TOTAL :-		**2754.61**	**26.75**	**21607.95**	**2754.61**	**26.75**	**22339.07**
	SAY AS TOTAL :-				**21608**			**22339.00**

वनपरिक्षेत्र अधिकारी
पडघा

तांत्रिक मान्यता क्र. 69 दि. 96/06/24
रक्कम - २२३३९/- बावीस हजार तीनशे एकोणचाळीस रु. मात्र

वनपरिक्षेत्र अधिकारी
पडघा

प्रशासकिय मान्यता क्र. 68 दि. 98/90/24
रक्कम - २२३३९/- बावीस हजार तीनशे एकोणचाळीस रु. मात्र
मात्र या रक्कमेस प्रशासकीय मंजुरी देण्यात येत आहे.

सहायक वनसंरक्षक
भिवंडी

Thane Forest Division, Thane

RATE STRUCTURE FOR COMPENSATORY AFFORESTATION ON WORKS IN ZONE II & III HEAVY RAIN FALL AREA (2500 PLANTS/Ha.)

Village - Wahuli , P.F. S.No.52 Beat Wahuli Round Wadapa TALUKA BHIWANDI DIST THANE

DAILY WAGES RATE 514.88 Area :- 1.0000 HECTARE

Sr. No.	Particulars of works	Mandays	Wages	Material supply	Total	Wages	Material supply	Total
	Ninth Year Operation							
1	Watch and ward (12 months - 1 watcher per 1.00 ha). Plantation	36.50	514.88	0.00	18793.12	514.88	0.00	18793.12
2	counting of survival percentage Grid wise and Species wise and to Note the same on register in May and October	2.00	1029.76	25.00	1054.76	1029.76	25.00	1054.76
3	Fire tracing	2.00	1029.76	0.00	1029.76	1029.76	0.00	1029.76
	TOTAL :-	**40.50**	**2574.40**	**25.00**	**20877.64**	**2574.40**	**25.00**	**20877.64**
4	Contingancy 3%		77.23	0.75	626.33	77.23	0.75	626.33
5	Labour welfare (Medi &water) 4%		102.98	1.00	103.98	102.98	1.00	835.11
	TOTAL :-		**2754.61**	**26.75**	**21607.95**	**2754.61**	**26.75**	**22339.07**
	SAY AS TOTAL :-				**21608**			**22339.00**

वनपरिक्षेत्र अधिकारी
पडघा

तांत्रिक मान्यता क्र. ९२ दि. १६/०८/२५
रक्कम - २२३३९/- बावीस हजार तीनशे एकोणचाळीस रु. मात्र

वनपरिक्षेत्र अधिकारी
पडघा

प्रशासकिय मान्यता क्र. ८४ दि. १४/१०/२५
रक्कम - २२३३९/- बावीस हजार तीनशे एकोणचाळीस रु. मात्र
मात्र या रक्कमेस प्रशासकीय मंजुरी देण्यात येत आहे.

मा. सहायक वनसंरक्षक
भिवंडी

Thane Forest Division, Thane

RATE STRUCTURE FOR COMPENSATORY AFFORESTATION ON WORKS IN ZONE II & III HEAVY RAIN FALL AREA (2500 PLANTS/Ha.)

Village - Wahuli , P.F. S.No.52 Beat Wahuli Round Wadapa TALUKA BHIWANDI DIST THANE

DAILY WAGES RATE 514.88 Area :- 1.0000 HECTARE

Sr. No.	Particulars of works	Mandays	Wages	Material supply	Total	Wages	Material supply	Total
	Tenth Year Operation							
1	Watch and ward (12 months - 1 watcher per 1.00 ha). Plantation	36.50	514.88	0.00	18793.12	514.88	0.00	18793.12
2	counting of survival percentage Grid wise and Species wise and to Note the same on register in May and October	2.00	1029.76	25.00	1054.76	1029.76	25.00	1054.76
3	Fire tracing	2.00	1029.76	0.00	1029.76	1029.76	0.00	1029.76
	TOTAL :-	**40.50**	**2574.40**	**25.00**	**20877.64**	**2574.40**	**25.00**	**20877.64**
4	Contingancy 3%		77.23	0.75	626.33	77.23	0.75	626.33
5	Labour welfare (Medi &water) 4%		102.98	1.00	103.98	102.98	1.00	835.11
	TOTAL :-		**2754.61**	**26.75**	**21607.95**	**2754.61**	**26.75**	**22339.07**
	SAY AS TOTAL :-				**21608**			**22339.00**

वनपरिक्षेत्र अधिकारी
पडघा

तांत्रिक मान्यता क्र. C3 दि. 96/06/24
रक्कम - २२३३९/- बावीस हजार तीनशे एकोणचाळीस रु. मात्र

वनपरिक्षेत्र अधिकारी
पडघा

प्रशासकिय मान्यता क्र. 24 दि. 98/90/24
रक्कम - २२३३९/- बावीस हजार तीनशे एकोणचाळीस रु. मात्र
मात्र या रक्कमेस प्रशासकीय मंजुरी देण्यात येत आहे.

मा. सहाय्यक वनसंरक्षक
भिवंडी

Thane Forest Division, Thane

RATE STRUCTURE FOR COMPENSATORY AFFORESTATION ON WORKS IN ZONE II & III HEAVY RAIN FALL AREA (2500

Village - Wahuli , P.F. S.No.52 Beat Wahuli Round Wadapa TALUKA BHIWANDI DIST THANE

DAILY WAGES RATE 514.88 Area :- 1.0000 HECTARE

Abstact

Sr. No.	Particulars of works	Mandays	Wages	Material supply	Total	Wages	Material supply	Total	Assuuming 10 % Amount
1)	PPO + PYO	321.00	176867.87	211996.36	388864	118943.97	201668.89	320613.00	352674.30
2)	First Year Operation	261.95	128337.19	140288.76	1829005	128337.19	140288.76	1889602.67	2078562.94
3)	Second Year Operation	311.00	151778.90	90102.96	569708.44	2968.61	90102.96	433629.28	476992.21
4)	Third Year Operation	178.09	78555.91	43534.62	140917.12	78004.99	43534.62	141648.25	155813.08
5)	Fourth Year Operation	40.50	2754.61	26.75	21607.95	2203.69	26.75	22339.07	24572.98
6)	Fith Year Operation	40.50	2754.61	26.75	21607.95	2203.69	26.75	22339.07	24572.98
7)	Sixth Year Operation	40.50	2754.61	26.75	21607.95	2203.69	26.75	22339.07	24572.98
8)	Seventh Year Operation	40.50	2754.61	26.75	21607.95	2203.69	26.75	22339.07	24572.98
9)	Eight Year Operation	40.50	2754.61	26.75	21607.95	2203.69	26.75	22339.07	24572.98
10)	Nine Year Operation	40.50	2754.61	26.75	21607.95	2203.69	26.75	22339.07	24572.98
11)	Tenth Year Operation	40.50	2754.61	26.75	21607.95	2203.69	26.75	22339.07	24572.98
	Total :-	**1355.54**	**554822.14**	**486109.95**	**3079750.85**	**343680.59**	**475782.48**	**2941866.69**	**3236053.36**

(Ramesh Kisan Rasal)
Range Forest Office
Padgha (P)