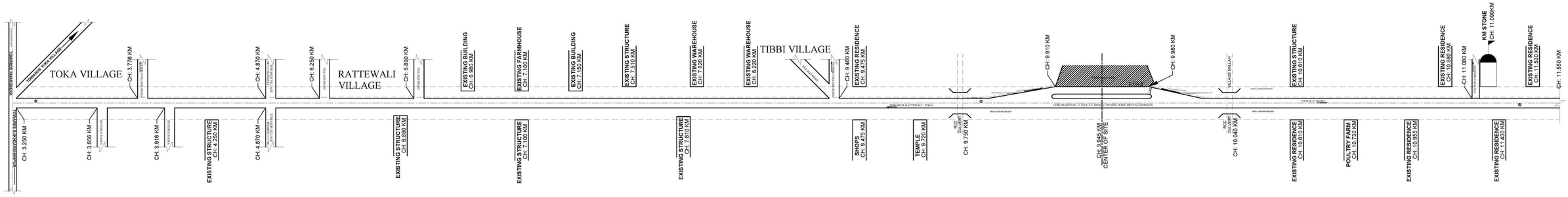

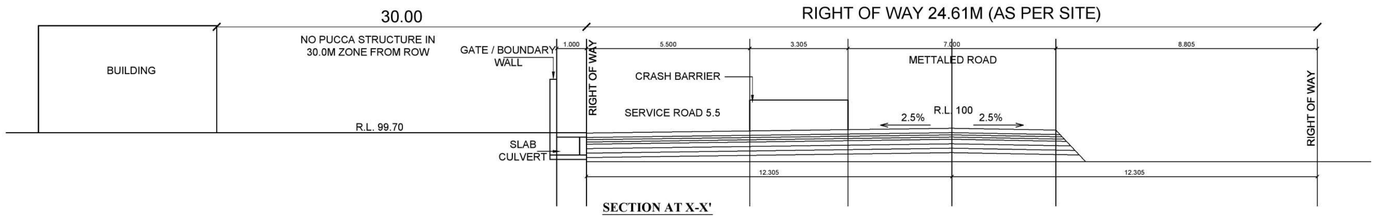

SECTION AT X-X'

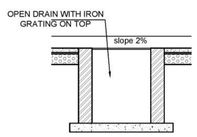

SECTION OF OPEN DRAIN

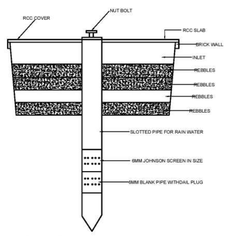

RAIN WATER HARVESTING SYSTEM

TYPICAL SECTION THROUGH ASPHALT AREA IN ENTRY / EXIT APPROACH

SECTION OF B.M. BOUNDARY WALL N.T.S.

CROSS SECTION OF CULVERT DESIGN AS PER IRC:SP-13 (TYPE-A) OF 1.52m. SPAN R.C.C. SLAB CULVERT.

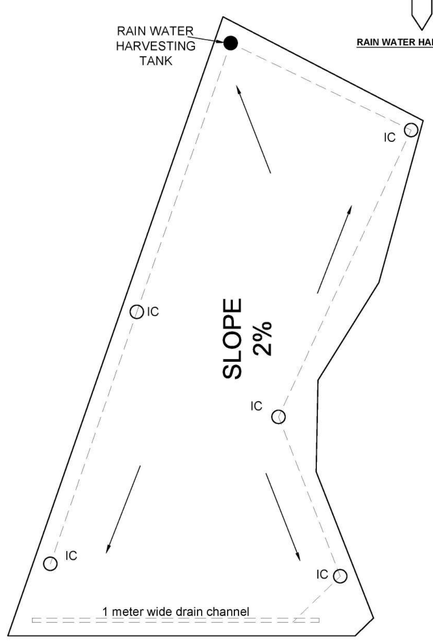

KERB STONE DETAIL

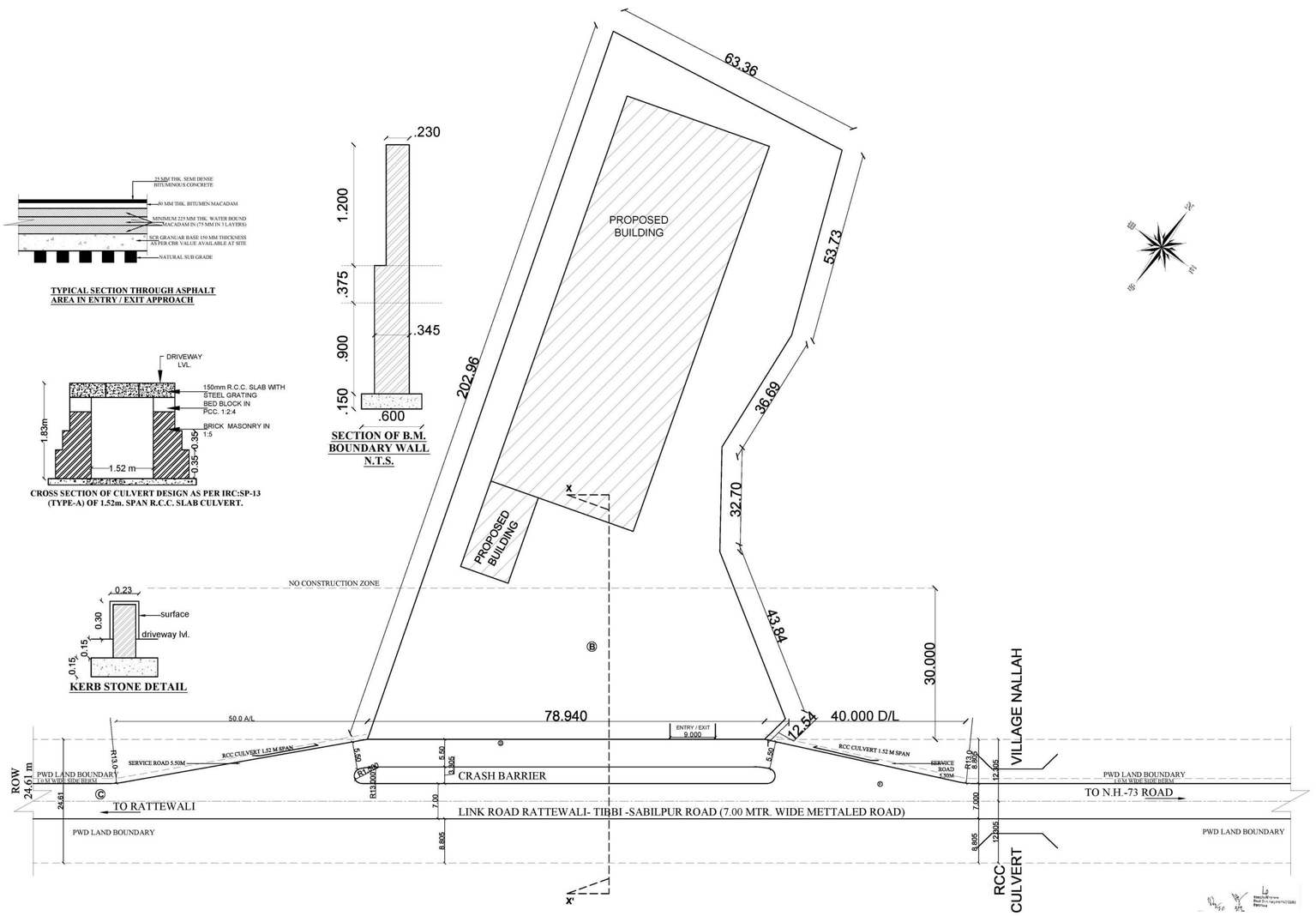

NOTES:-

1. ACCESS ROAD SHALL BE MIN. PAVEMENT COMPOSITION OF 150 MM GSB, WBM, GR II, III OF 75 MM EACH 50 MM BM & 25 SDBC.

2. ALL THE PAVEMENT MARKING SHALL BE AS PER IRC 35:1987.

3.THE LENGTH OF SEPARATOR ISLAND SHALL BE 3.0M.

4.THE SEPARATOR BUFFER STRIP SHALL BE TRUFFLE WITH PROVISION 275MM KERBS.

5.CULVERT SHALL BE PROVIDED IN THE LINE OF STORM WATRE DRAIN ON ENTRY & EXIT APPROACHES TO CATER TO THE EXPECTED DISCHARGE.

6. ALL THE DIMENSIONS ARE IN METER UNLESS MENTIONED

LEGEND

Ⓐ	SITE AHEAD AT 1KM & 500M
Ⓑ	SITE
Ⓒ	SITE AHEAD
Ⓓ	DRIVEWAY
Ⓔ	ONE WAY
Ⓕ	NO ENTRY

LICENSEE'S SUCESSOR

ARCHITECT:

Ar NISHANT
B. Arch
CA / 2018 / 100704

DRAWING NAME:

SITE PLAN

CLIENT NAME: Mr. VISHNU GUPTA

SCALE : NTS

PLOT SIZE:

PROJECT NAME:

PROPOSED SITE FOR Mr. VISHNU GUPTA, VILLAGE - SABILPUR, TEHSIL - RAIPUR RANI, DISTT. - PANCHKULA (HARYANA)

DATE: 27/12/2021

DRG. NO.: 01

DRAWN BY:

PRINCIPAL ARCHITECT:

Ar. NISHANT SINGLA

ARCHITECTS & INTERIOR DESIGNERS
PHONE :- 7876676619
EMAIL :- nishantsingla8@gmail.com