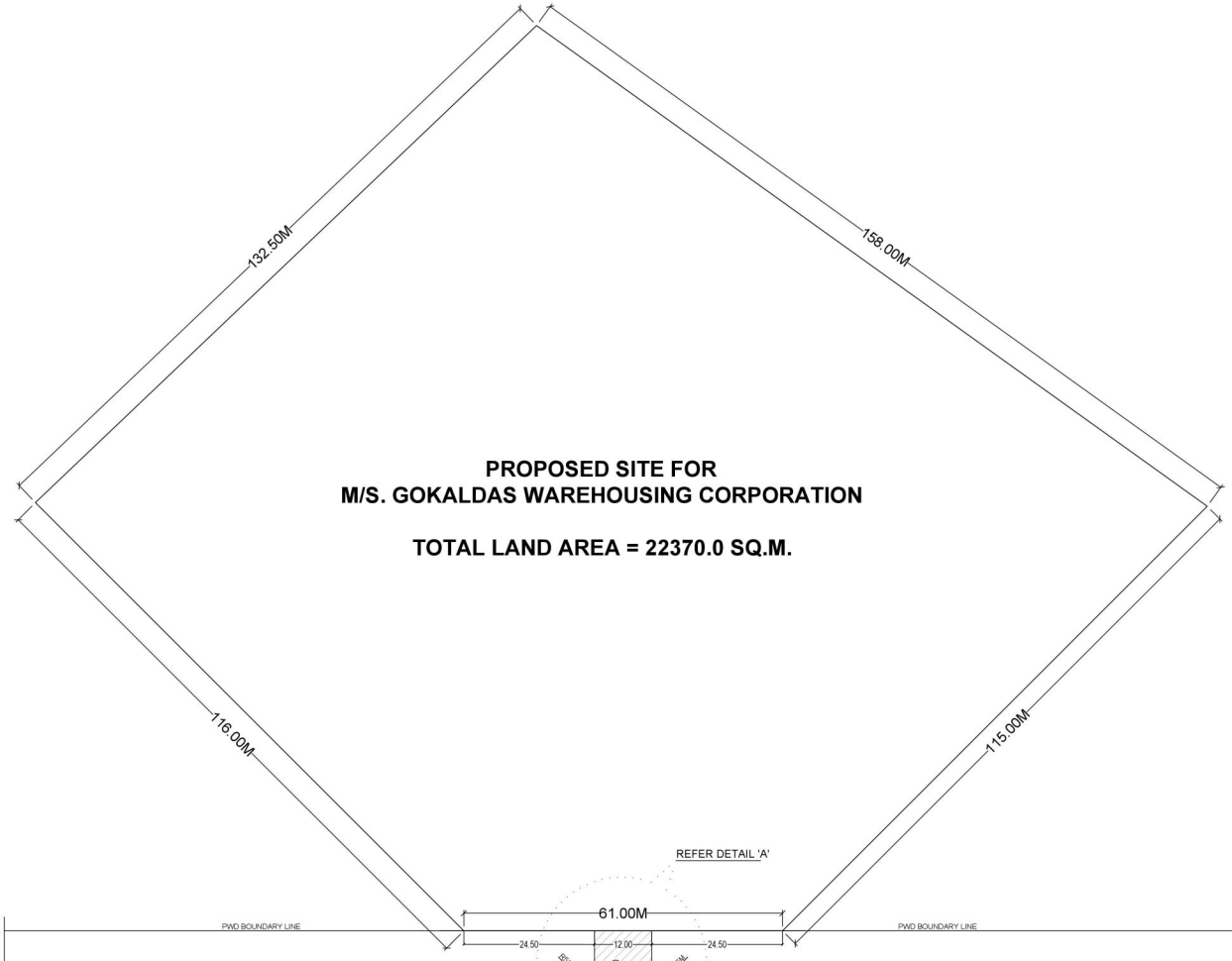


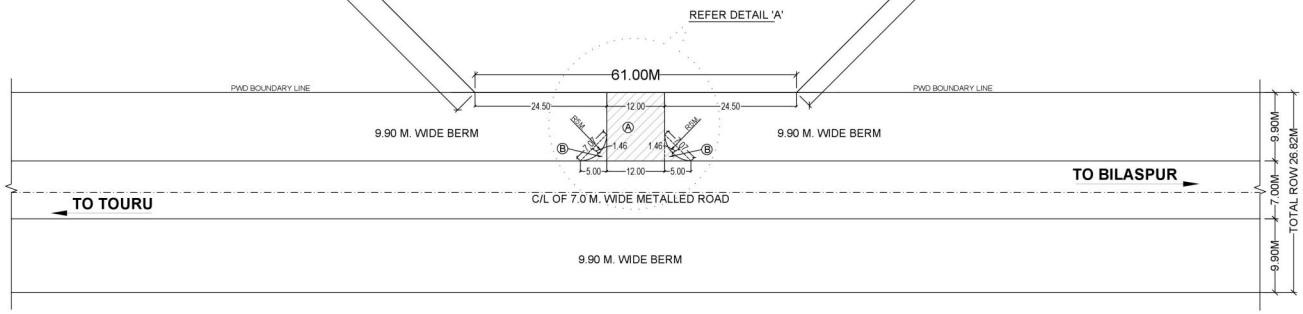


**LAYOUT PLAN**
**SCALE :- N.T.S**

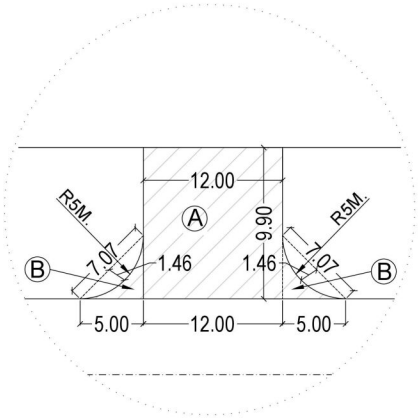


REFER DETAIL 'A'

LEGEND:-

FOREST AREA SHOWN IN

**DETAIL OF FOREST AREA**

**AREA AT 'A' = 12.0X9.90 = 118.80 SQ.M.**

**AREA AT 'B+B' = 2($\frac{1}{2}$X5X5 - $\frac{2}{3}$X7.07X1.46)**

**= 2(12.5-6.88) = 11.24 SQ.M.**

**TOTAL AREA AT (A+B) = 118.80 + 11.24 = 130.04 SQ.M.**

**OR SAY = 0.0130 HA.**

**SITE AND LAYOUT PLAN FOR M/S. GOKALDAS WAREHOUSING CORPORATION, ON BILASPUR TAURU ROAD, AT VILL. - JHAMUWAS, TEHSIL - TAURU, DISTT. NUH, (HARYANA)**

NOTE:- ALL DIMENSION IN METER

| | | | |
|---|---|---|---|
| DRAWN BY. | SANDEEP | CHECKED BY. | RS |
| DATED | 20.12.2021 | DRAWING NO. | RWR / WAREHOUSE /01 |

PREPARED BY.

M/S

**M S ASSOCIATES**
Architecture / Planner / Designer
Mob. 8950078320

APPROVED BY:-

SIGNATURE OF APPLICANT