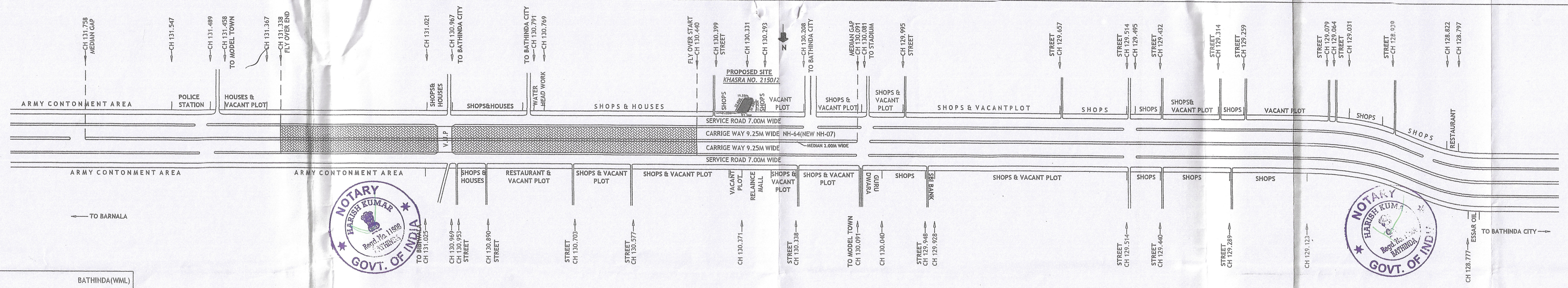

LOCATION	BATHINDA(WML)
KHASRA NO.	2150/2
NEAREST POLICE STATION	MODEL TOWN, BATHINDA
NEAREST RAILWAY STATION	BATHINDA
TEHSIL	BATHINDA
DISTT.	BATHINDA
PIN CODE	151001
STATE	PUNJAB

AREA OF APPROACES (TO BE LEASED)

1. AREA OF 2A = 2X7.50X3.62
   = 54.30 SQ.M.
2. AREA OF 2B = 2(1/2X5.00X3.62
   - 2/3X6.17X0.37)
   = 15.06 SQ.M.

TOTAL = 69.36 SQ.M.

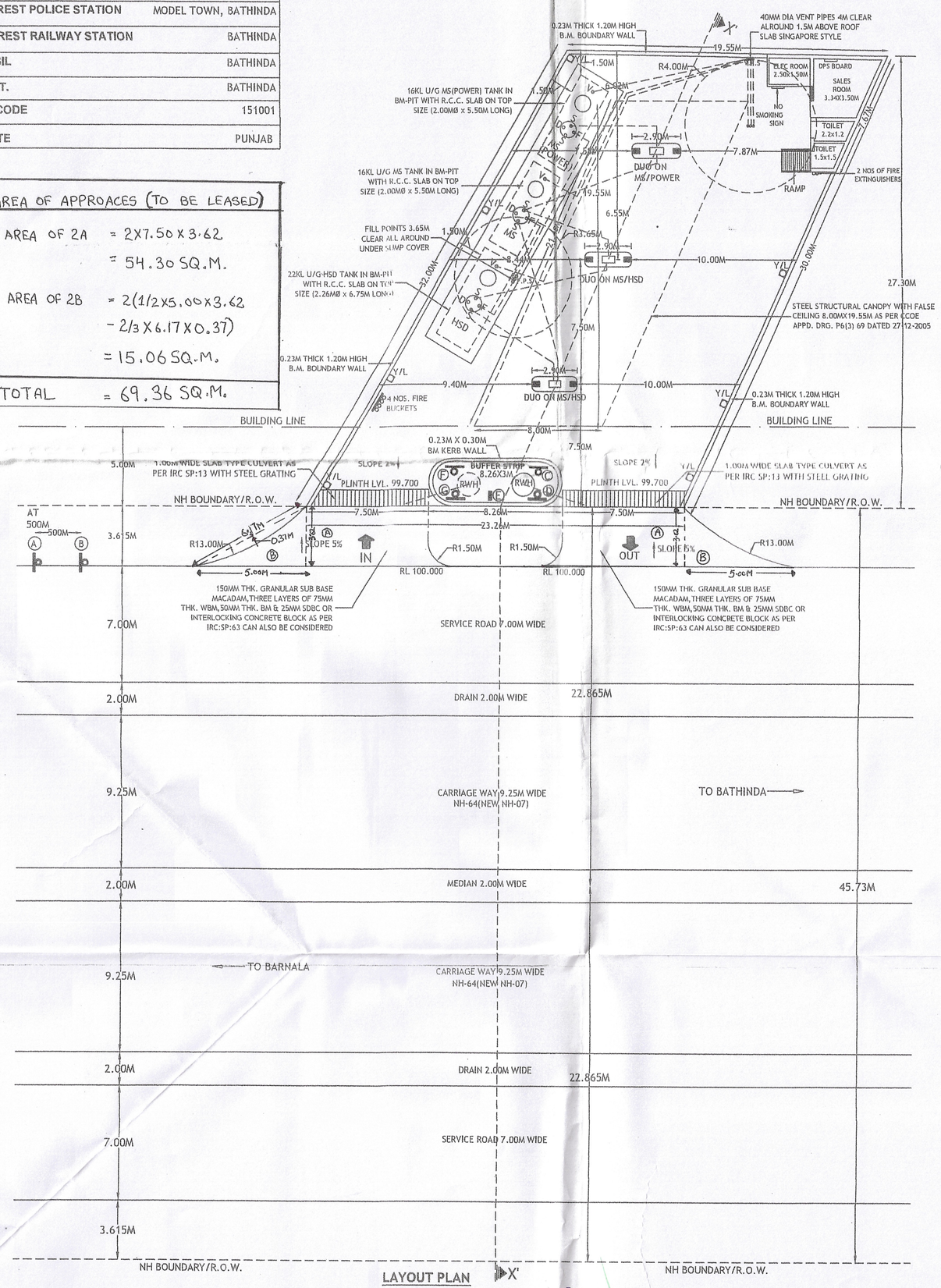

LAYOUT PLAN
SCALE-1:200

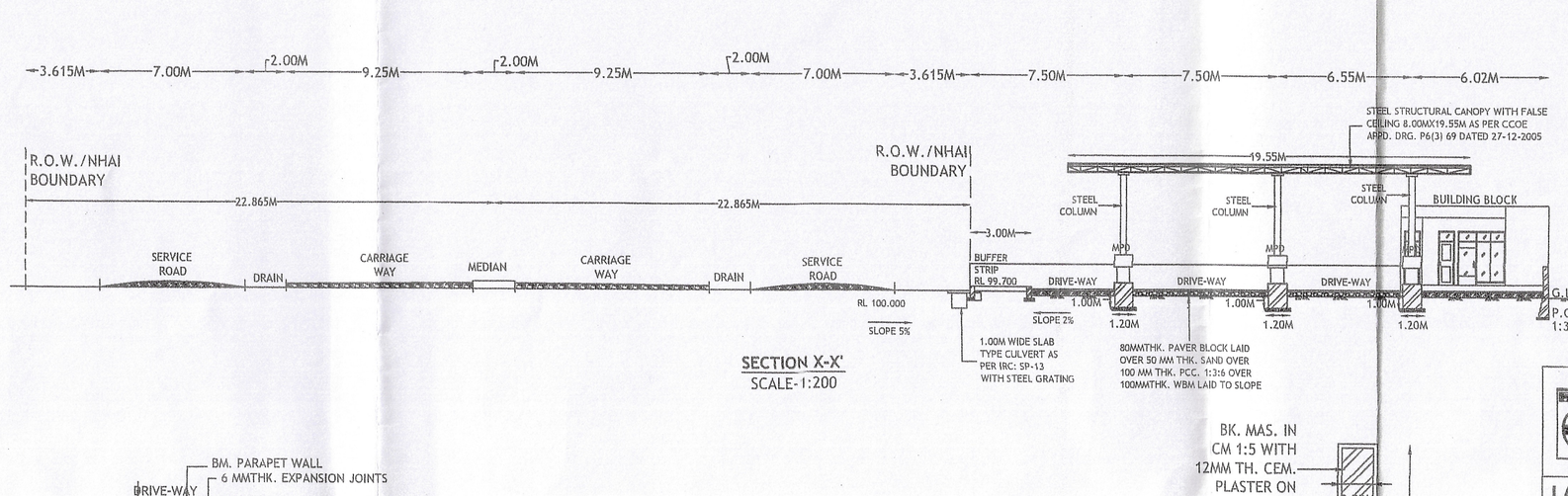

SECTION X-X'
SCALE-1:200

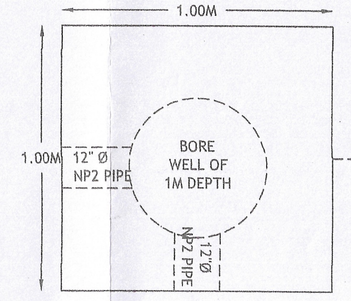

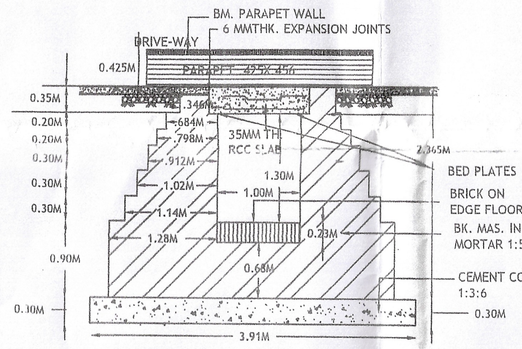

SEC. DETAIL OF 1M SPAN R.C.C. SLAB CULVERT FOR CLASS 70-R LOADING
SCALE 1:50

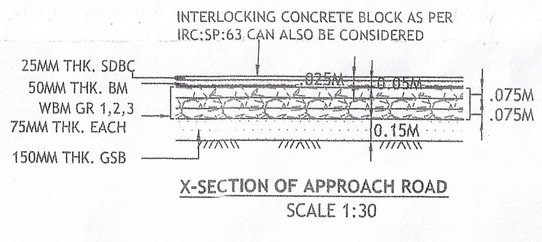

X-SECTION OF APPROACH ROAD
SCALE 1:30

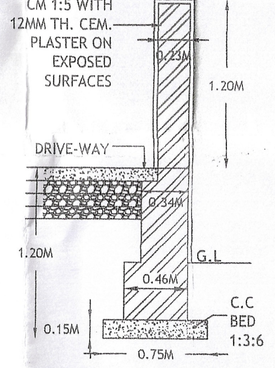

SECTION OF BOUNDARY WALL
SCALE 1:30

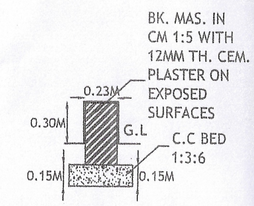

SECTION OF KERB WALL
SCALE 1:30

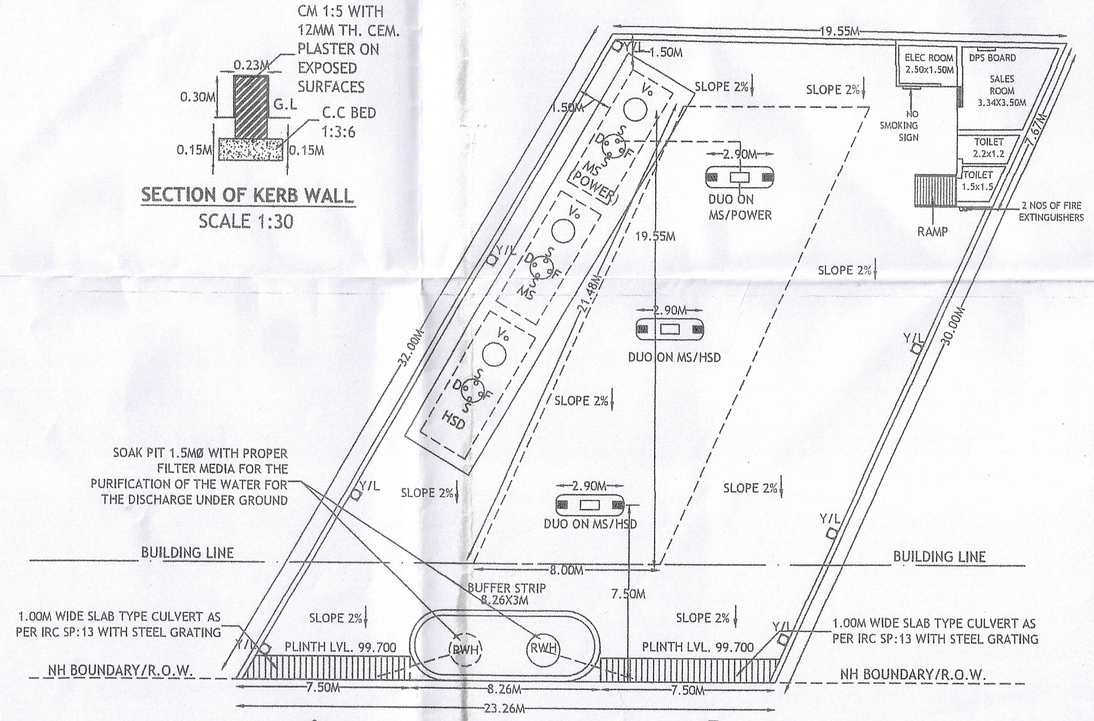

DRAINAGE PLAN
SCALE-1:200

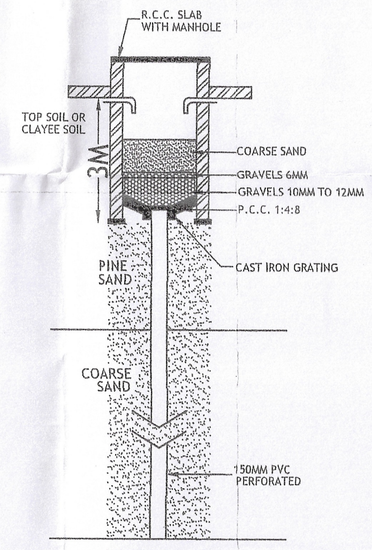

SECTION AT RECHARGE BORE WELL
SCALE-1:100

HINDUSTAN PETROLEUM CORP.LTD.
BATHINDA REGIONAL OFFICE

LAYOUT, LOCATION & DRAINAGE PLAN OF PROPOSED RETAIL OUTLET AT BATHINDA (WML) (BETWEEN BIBIWALA CHOWK AND ROSE GARDEN), CHKM 130.331(RHS), NH-64 (NEW NH-07), ON BATHINDA - BARNALA ROAD, TEHSIL AND DISTT. BATHINDA (PUNJAB).

NOTES

1. CERTIFIED THAT ALL THE TRAFFIC SIGNS ARE AS PER IRC: 67-2012 AND IRC: SP 55-2014.
2. CERTIFIED THAT THERE IS NO ANY EXISTING BARRIER OF SALES TAX ETC WITHIN 1 K.M. RANGE.
3. ALL THE STANDARD CONDITIONS HAVE BEEN SATISFIED.
4. ALL THE DIMENSIONS ARE IN METRES UNLESS OTHER -WISE SPECIFIED.
5. STORM WATER OF OUR BUILDING WILL NOT DISTURB NEW NH-07.
6. 1.00M WIDE SLAB TYPE CULVERT WILL BE PROVIDED BY US.
7. LEVEL OF BUILDING KEPT 5% BELOW ON NH ROAD LEVEL.
8. WE WILL NOT DEMAND ANY GAP IN CENTRAL VERGE IN FRONT. OF OUR PLOT.
9. THE MORT&H INSTRUCTION SHELL NOT VOILATED.
10. CERTIFIED THAT THE ALL MORT&H CONDITIONS HAVE BEEN SPECIFIED.
11. CERTIFIED THAT WE WILL APPLY THE CASE FOR RENEWEL AFTER 5 YEAR FROM THE DATE OF ISSUE.
12. WE WILL PAY THE NECESSORY FEE FOR THE USE OF NH LAND WHENEVER ASKED BY THE AUTHORITIES.

(A) -Fuel Station Ahead	(E)-Fuel Station Board
(B) -Fuel Station	(F)- Toilet
(C) -No Right Turn	(G) - Drinking Water
(D) -No Entry	

DWG.NO. : TCS/HPCL/BTH/2423 DATE :

AREA DETAILS:-

TOTAL PLOT AREA	:	590.00SQ.M
AREA UNDER BUILDING	:	27.34SQ.M
AREA UNDER CANOPY	:	156.40SQ.M
TOTAL AREA UNDER BUILDING & CANOPY	:	183.74SQ.M

The Cyber Space
Plot no. 2, khasra no.3, Ist floor, Saral Sadhu Ram, G.T. Road, Putlighar Chowk, Amritsar. Contact No. +919876103744

APPLICANT

Omprakash Jagarwal
Officer-Retail Engineering
Hindustan Petroleum Corporation Ltd.

CONSULTANT

COUNTER SIGN
D.R.O., BATHINDA

HIGHWAY ADMINISTRATOR

पी. के. शाक्या / P. K. SHAKYA
मुख्य अभियन्ता / Chief Engineer
सड़क परिवहन एवम राजमार्ग मंत्रालय
Ministry of Road Transport & Highway
भारत सरकार / Govt. of India
चण्डीगढ़ / Chandigarh

राकेश कुमार / Rakesh Kumar
वरिष्ठ क्षेत्रीय बिक्री प्रबंधक
Sr. Area Sales Manager
हिंदुस्तान पेट्रोलियम कार्पोरेशन लिमिटेड
Hindustan Petroleum Corp. Ltd.
बठिंडा रिटेल बिक्री-क्षेत्र
Bathinda Retail Sales Area

Sub Divisional Engineer
Const. Sub Divn. No. 1
PWD B & R, Bathinda

Executive Engineer
Central Works Divn. No.
PWD, B & R, Bathinda

Attested to be True Copy
HARISH KUMAR
Advocate & Notary
Appointed by Govt. of India
BATHINDA
10 JAN 2020

Attested to be True Copy
HARISH KUMAR