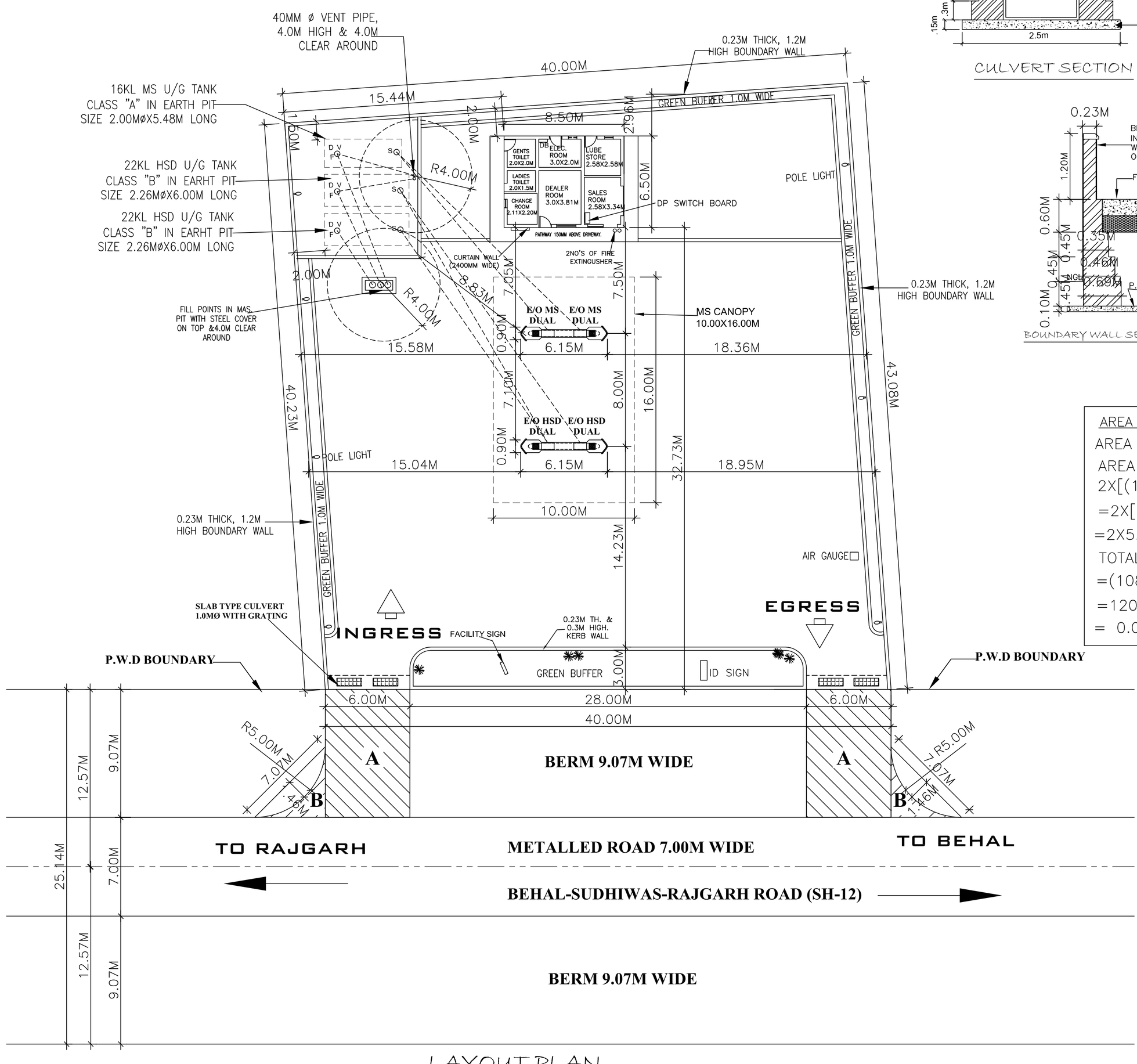

LAYOUT PLAN SCALE=1:200

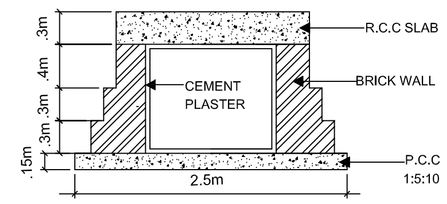

CULVERT SECTION

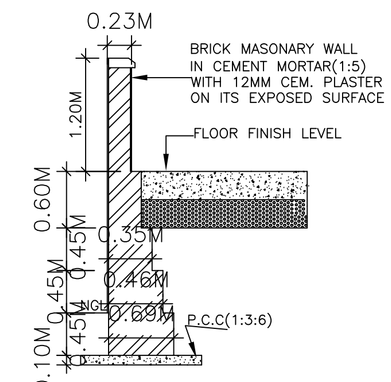

BOUNDARY WALL SECTION

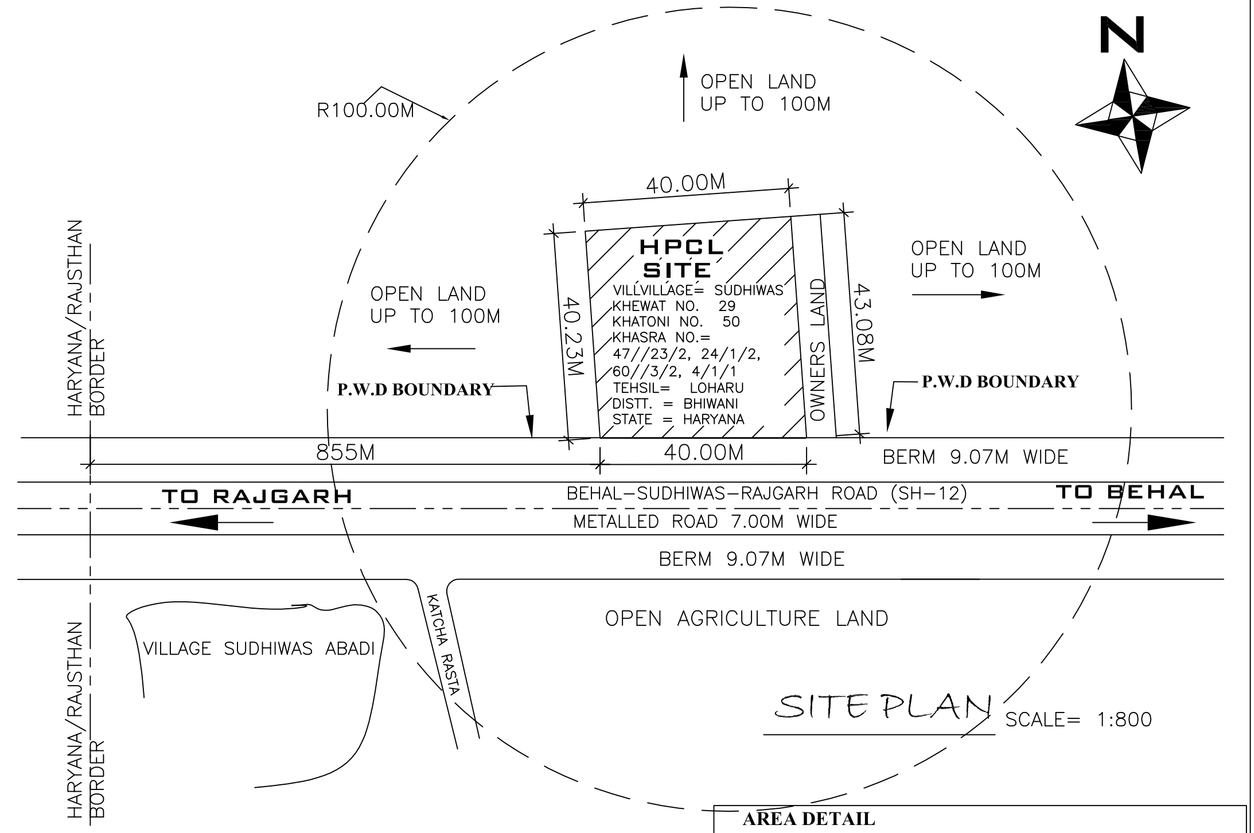

SITE PLAN SCALE= 1:800

AREA OF APPROACHES

AREA AT 'A' =6.0MX9.07M=54.42X2=108.84 SQ.M.

AREA AT 'B'=AREA MARKED 'B'-AREA OF SEGMENT 2X[(1/2X5.0MX5.0M)-2/3X7.07MX1.46M]

=2X[12.5-6.88] SQ.M.

=2X5.619 SQ.M.=11.24 SQ.M.

TOTAL AREA =(A+B)

=(108.84+11.24) SQ.M.

=120.08 SQ.M.

= 0.0120 HECT.

AREA DETAIL	
TOTAL PLOT AREA	1666.48 SQM.
TOTAL BUILDING AREA	55.25 SQM.
TOTAL CANOPY AREA	160.00 SQM.

NOTES & CERTIFICATES

1. CERTIFIED THAT THERE IS NO OTHER STRUCTURE WILL BE ERECTED NOR ANY OTHER SERVICE RENDERED EXCEPT THAT CONNECTED WITH THE PETROL PUMP WITHOUT THE PRIOR APPROVAL OF PWD.
2. CERTIFIED THAT THERE IS NO ROAD CROSSING WITH IN 100M BETWEEN THE TANGENT POINT OF THE CURVE OF SIDE ROAD AND THAT OF THE FUEL FILLING CUM SERVICE STATION.
3 CERTIFIED THAT THERE NO OBJECTION FROM ROAD POINT OF VIEW FOR THE INSTALLATION OF THIS PUMP THE PROPOSAL WILL NOT EFFECT THE FUTURE IMPROVEMENT OF THE ROAD.
4. CERTIFIED THAT NO OTHER PETROL PUMP EXISTS WITHIN THE DISTANCE OF 300M ON EITHER SIDE OF THE PLOT.
5. CERTIFIED THAT THE BERM PORTION IS NOT INCLUDED IN THE AREA OF LAND TO BE LEASED FROM P.W.D FOR APPROACH ROAD BUT IS TO BE METALLED BY THE CORPORATION.
6. CERTIFIED THAT ALL THE CONDITIONS LAID DOWN BY THE GOVT. OF INDIA AND IRC FROM TIME TO TIME WITH THE LOCATION OF ROAD SIDE FUEL FILLING STATIONS HAVE BEEN COMPLIED WITH ENTIRE CONSTRUCTION WILL BE ON CORPORATION LAND.
7. NO DRAIN,SEWER OR STRUCTURE WITHIN 1.5M FROM U/G TANKS.
8. SUCTION PIPE UNDER THE DRIVEWAY HOUSED IN PIPES SLEEVES.
9. ELECTRIC FITTINGS CONFORM TO ISS CODE NO 2148 FOR DISPENSING PUMP ONLY
10. D.P.S BOARD 1.5M HIGH FROM FLOOR LEVEL AND WILL NOT BE KEPT UNDER LOCK AND KEY.
11. TANKS FED BY TANK LORRY.
12. 40MM DIA. VENT PIPES,4.0M HIGH FROM G.L. AND 4M CLEAR AROUND. THE OPEN END OF VENT PIPES COVERED WITH TWO LEAR OF NON CORRODIBLE METAL WIRE GAUGE OF 11MESH PER CM.
13. NO HEDGES AND PLANTS MORE THAN .60M HIGH SHOULD BE GROWN AROUND THE BUFFER
14. THERE SHOULD BE SUFFICIENT STANDING SPACE IN SIDE THE STATION FOR VEHICLES TO WAIT FOR THEIR TURN 15. IN AND OUT SIGNS ARE PUT UP TO GUIDE VEHICLES DURING THE DAY AND ARE PROPERLY LIT UP TO GUIDE THEM AT NIGHT.
16. NO SMOKING SIGN,FIRE EXTINGUISHER AND FIRE BUCKETS PROVIDED AT SITE.
17. CERTIFIED THAT BUFFER SHOULD NOT HAVE ANY INSTALLATION , UNDER GROUND TANKS ETC.
18. CERTIFIED THAT THE KERBING STONE ALONG BUFFER IS TO BE MADE BY CORP.
19. CERTIFIED THAT THE METALLING OF THE BERM PORTION AT THE COST OF COMPANY TO BE
20. CERTIFIED THAT THERE WILL NOT BE ANY HINDRANCES FROM OVER HEAD LINES AND POLES.
21. CERTIFIED THAT THE SURPLUS WATER WILL NOT BE DISPOSED OFF IN PWD LAND.
22. CERTIFIED THAT ALL CLEARANCES/APPROVAL FROM MOP,IRC & OTHER RELEVANT GOVT. DEPTS. HAVE ALREADY BEEN OBTAINED.
23. CERTIFIED THAT THERE IS NO COURT CASE PENDING IN ANY COURT OF INDIA AGAINST THIS PREMISES.
24. CERTIFIED THAT THIS IS NOT A RESITMENT CASE.
25. 16/22KL STEEL TANK HAS BEEN FABRICATED AS PER DRG. APPROVED BY CCEO NAGPUR VIDE HIS LETTER NO.- P-6 (3) 60 OF DATED 6-10-2005
26 CERTIFIED THAT THE CANOPY MEASURING 10.00X16.00M CONFIRM TO SOUND ENGINEERING SPECIFICATION

हिंदुस्तान पेट्रोलियम कॉरपोरेशन लमिटिड

HINDUSTAN PETROLEUM CORPORATION LIMITED

(HISSAR REGIONAL OFFICE)

(A GOVERNMENT OF INDIA ENTERPRISE)

VILLAGE = SUDHIWAS	
KHEWAT NO. 29 MIN.	
KHATONI NO. 50	
KHASRA NO.= 47//23/2,24/1/2, 60//3/2,4/1/1	
NEAREST POLICE STATION= BEHAL	
NEAREST RAILWAY STATION= RAMPURA	
TEHSIL = LOHARU	
DISTT. = BHIWANI	
STATE = HARYANA	
PIN CODE = 127029	

PROPOSED SITE & LAYOUT PLAN OF RETAIL OUTLET ON BEHAL-SUDHIWAS-RAJGARH ROAD(SH-12),AT CHAINAGE 201.045(RHS), CENTRE OF PLOT AT VILLAGE SUDHIWAS, SUB-TEHSIL BEHAL, TEHSIL- LOHARU, DISTRICT BHIWANI (HARYANA)

LIC. NO.= NEW PROPOSAL

DRG. NO.= B-113

DATED: 04.10.2016

VASTUKIRTI CONSULTANTS
PH NO. 7597202420,7810375520
Email: shaikhwajid44@gmail.com