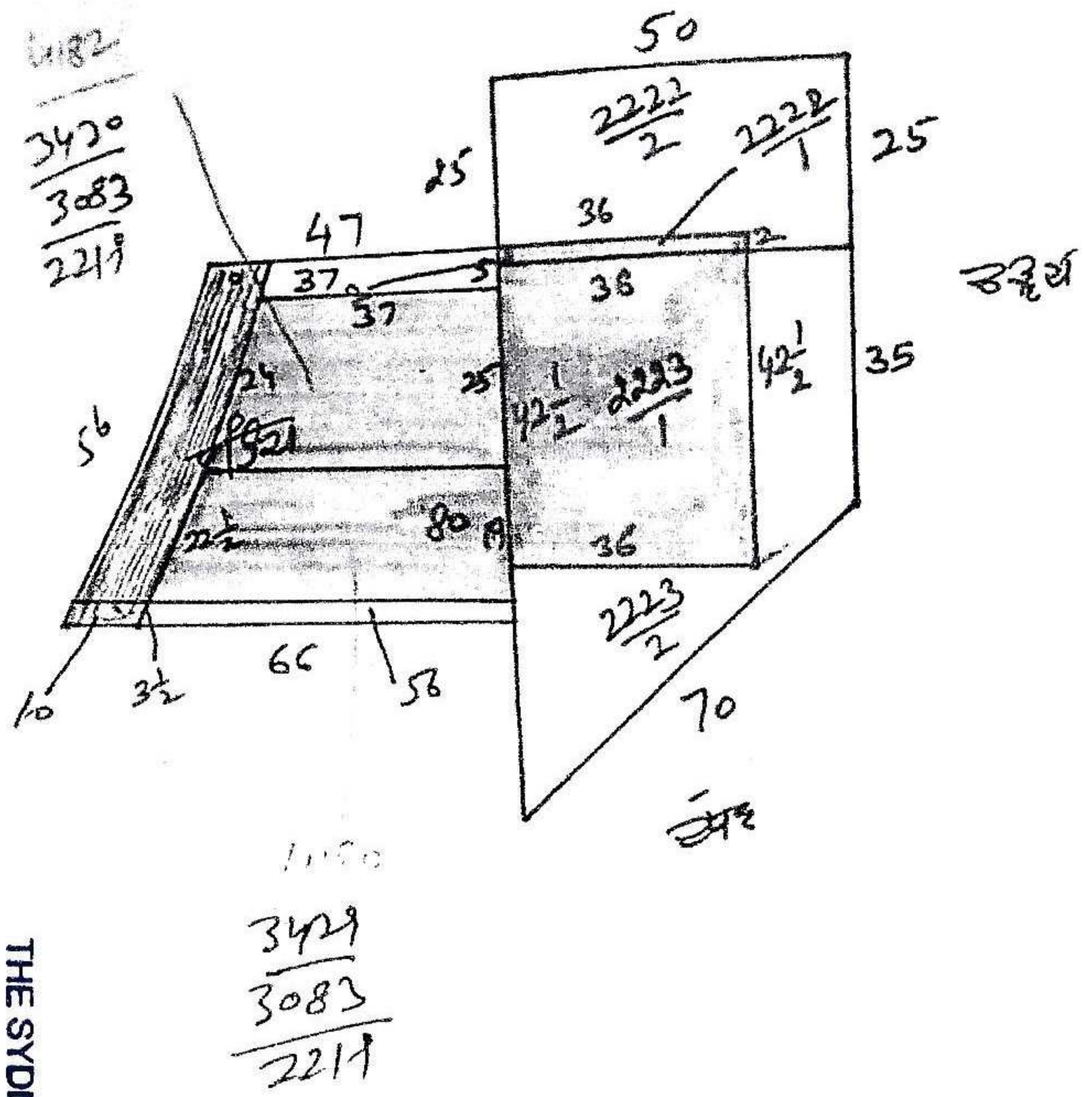

2222/1	2	
2222/2		
2223/1	42 1/2	

THE SYDNEY GRAND

Partner